AN ENERGY-RECOVERY ELECTRON LINAC-ON-PROTON RING COLLIDER

L. Merminga, G. Krafft, V. Lebedev

Jefferson Lab

Newport News, VA

2nd EPIC Workshop,

MIT, September 14-16, 2000

OUTLINE

- Energy Recovery Linacs
  - Experiments to date
  - Energy Recovery Works
  - Benefits of Energy Recovery
- An electron linac-on-proton ring collider reasoning & point design
  - No proton cooling
  - Proton cooling
  - Dependence on energies
- Accelerator Physics of Proton Ring
  - Intrabeam scattering
  - Collective Effects

OUTLINE (cont'd)

- Accelerator Physics of Energy Recovery Linacs (ERLs)
  - Source
  - Accelerator Transport
  - Coherent Synchrotron Radiation
  - RF Stability
  - Higher Order Modes and Beam Breakup
- Linac – Ring Instabilities
- Conclusions

ENERGY RECOVERY

Definition

Process by which energy is transferred to the rf cavities by the decelerating beam.

Major Energy Recovery Experiments to date

- Stanford SCA/FEL
- Los Alamos FEL
- CEBAF Injector
- Jefferson Lab 1.7 kW FEL

THE SCA/FEL ENERGY RECOVERY EXPERIMENT

T.I. Smith, et al., "Development of the SCA/FEL for use in Biomedical and Materials Science Experiments," NIMA 259 (1987)

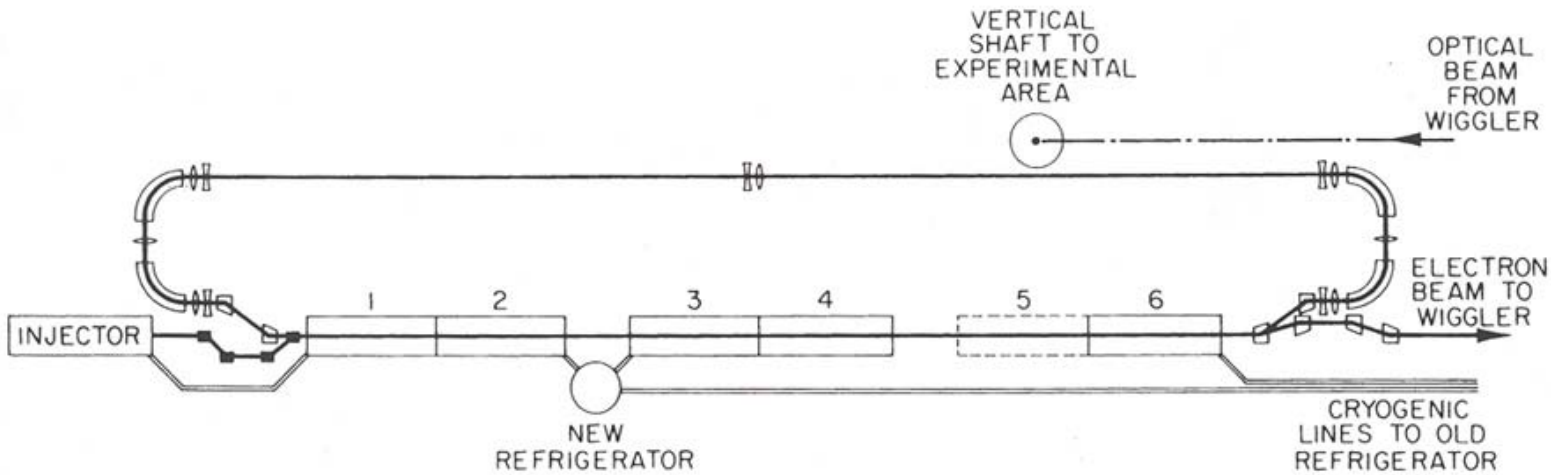

Jefferson Lab

THE LOS ALAMOS FEL ENERGY RECOVERY EXPERIMENT

D. Feldman, et al. "Energy Recovery in the Los Alamos Free Electron Laser." NIMA 259 (1987)

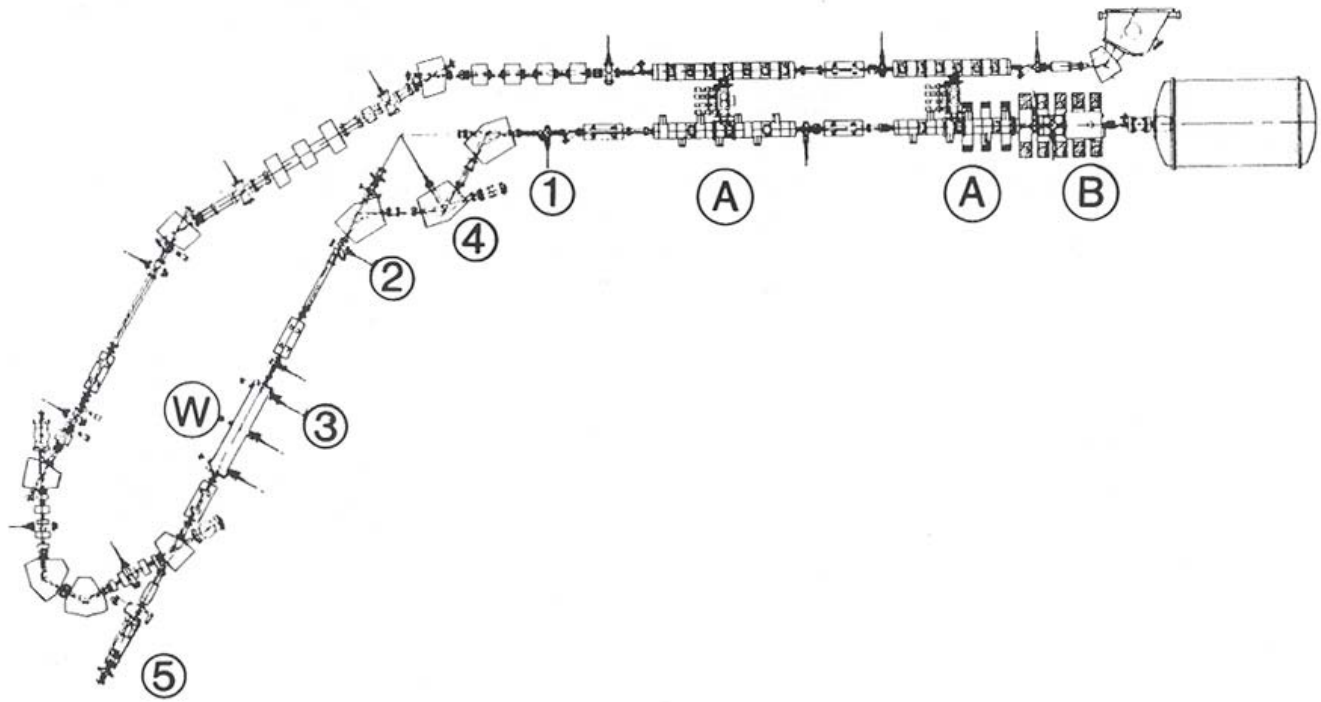

THE CEBAF INJECTOR ENERGY RECOVERY EXPERIMENT

N. R. Sereno, "Experimental Studies of Multipass Beam Breakup and Energy Recovery using the CEBAF Injector Linac," Ph.D. Thesis, University of Illinois (1994)

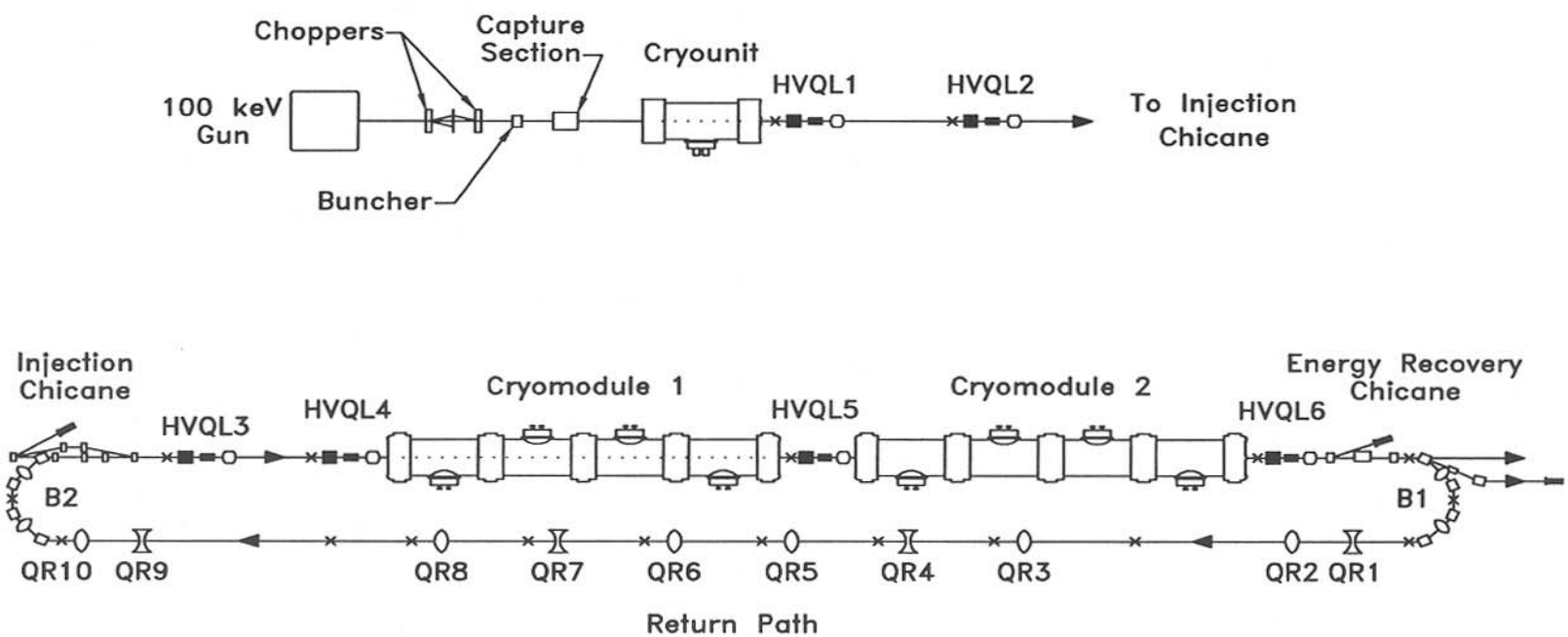

THE JLAB 1.7 kW IRFEL AND ENERGY RECOVERY DEMONSTRATION

G. R. Neil, et al., "Sustained Kilowatt Lasing in a Free Electron Laser with Same-Cell Energy Recovery," Physical Review Letters, Volume 84, Number 4 (2000)

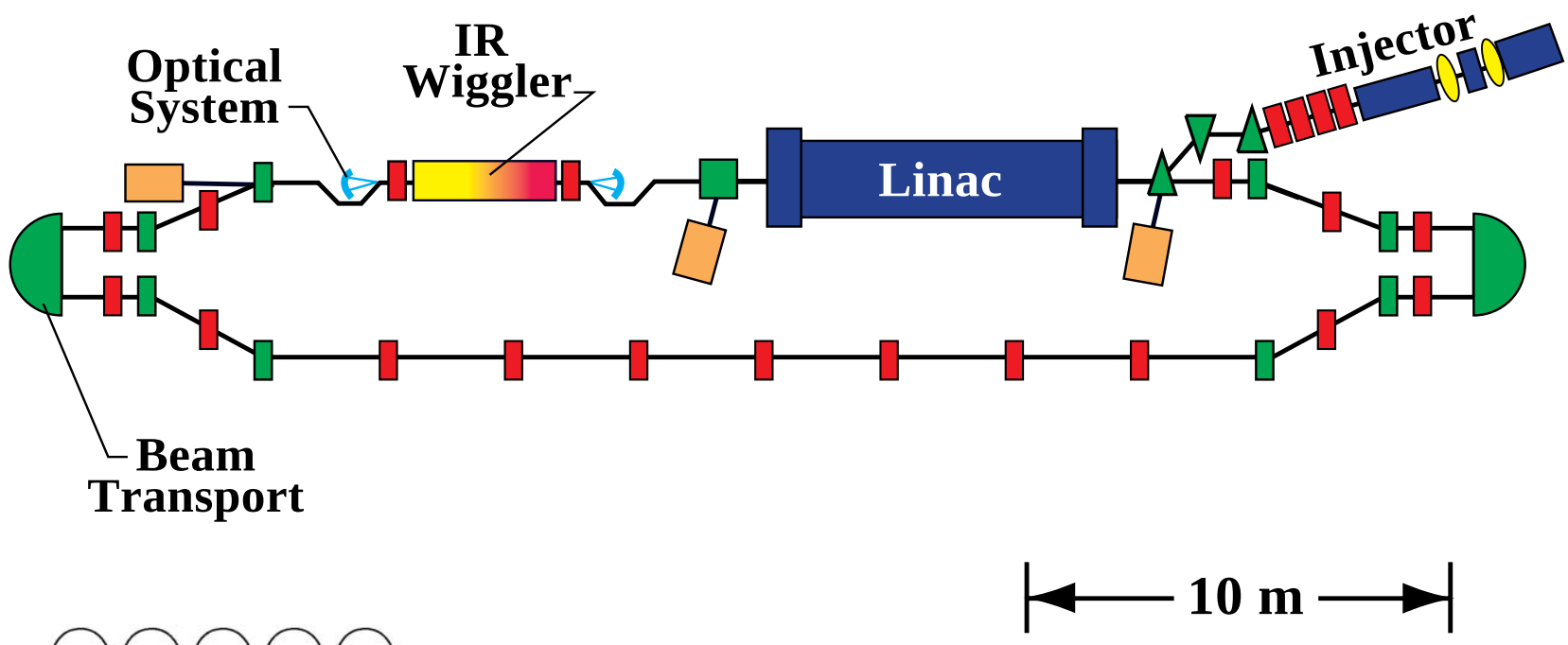

Jefferson Lab

THE JLAB IRFEL

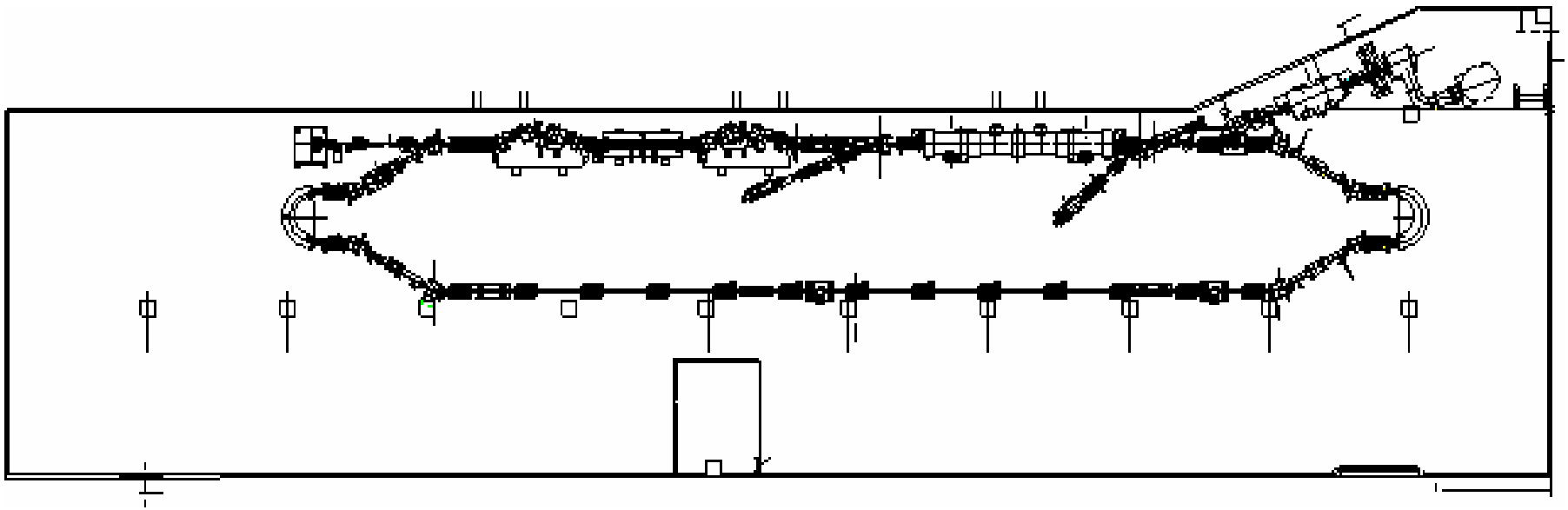

Jefferson Lab

THE JLAB IRFEL 10 kW UPGRADE PROJECT

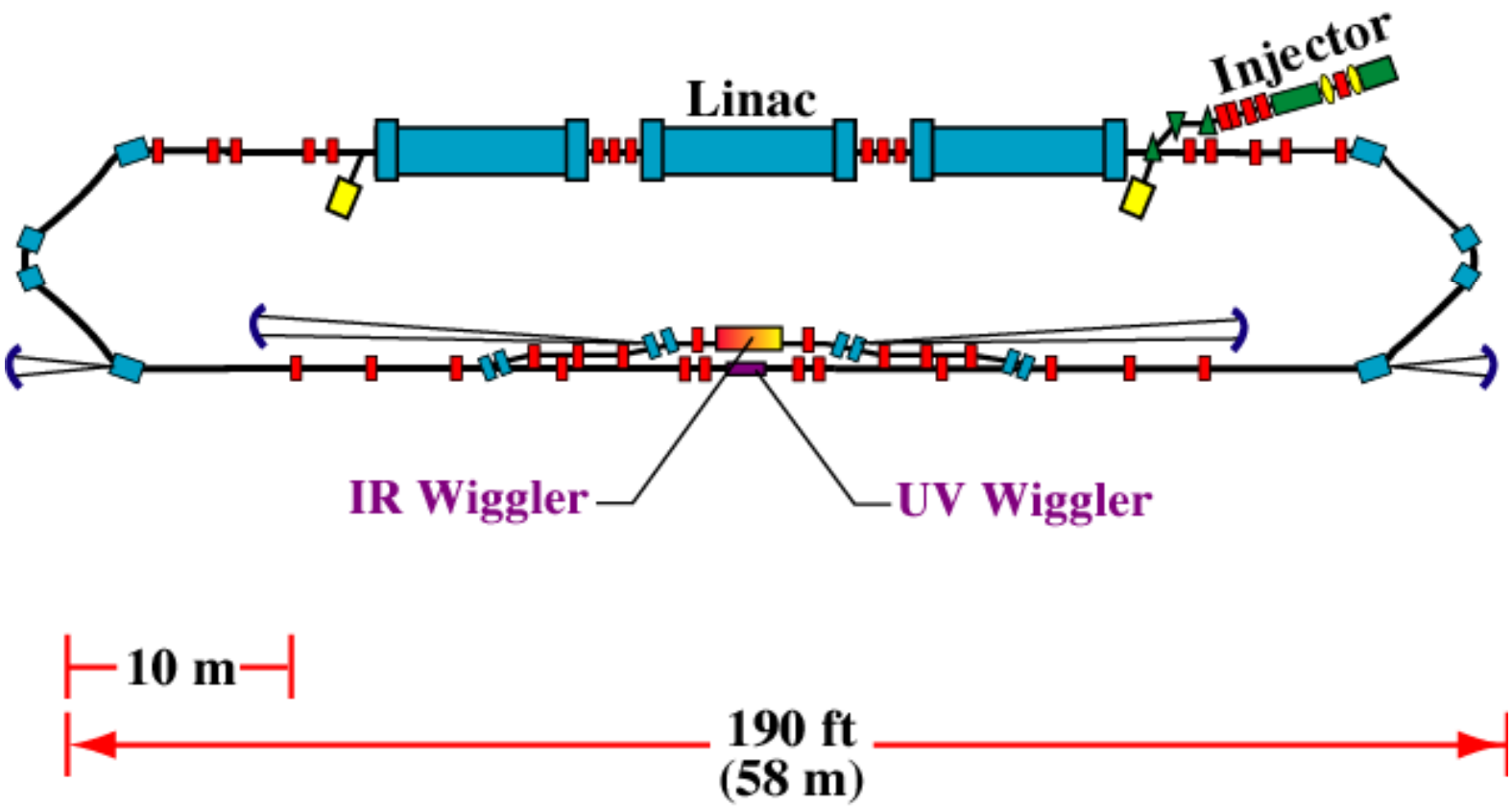

Jefferson Lab

ENERGY RECOVERY WORKS

Gradient modulator drive signals in 4 linac cavities measured without energy recovery (signal level around 2 V) and with energy recovery (signal level around 0).

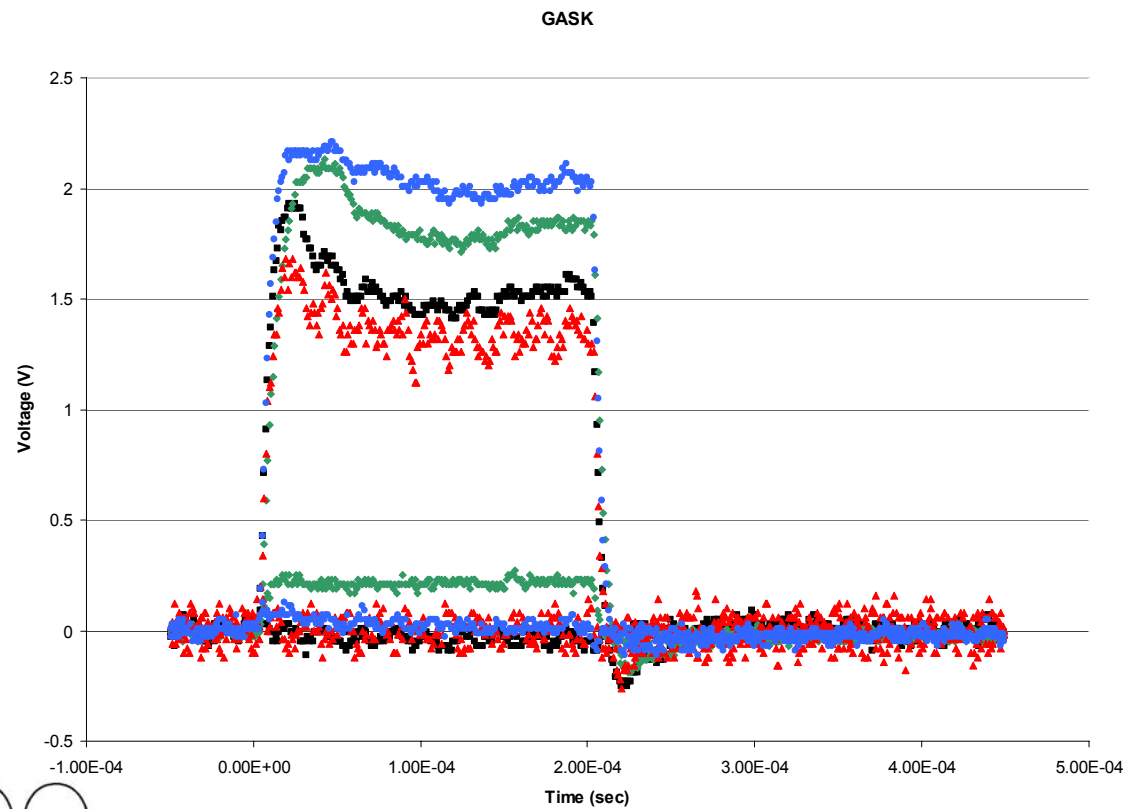

Jefferson Lab

ENERGY RECOVERY WORKS

Gradient modulator drive signal in a linac cavity measured without energy recovery (signal level around 2 V) and with energy recovery (signal level around 0).

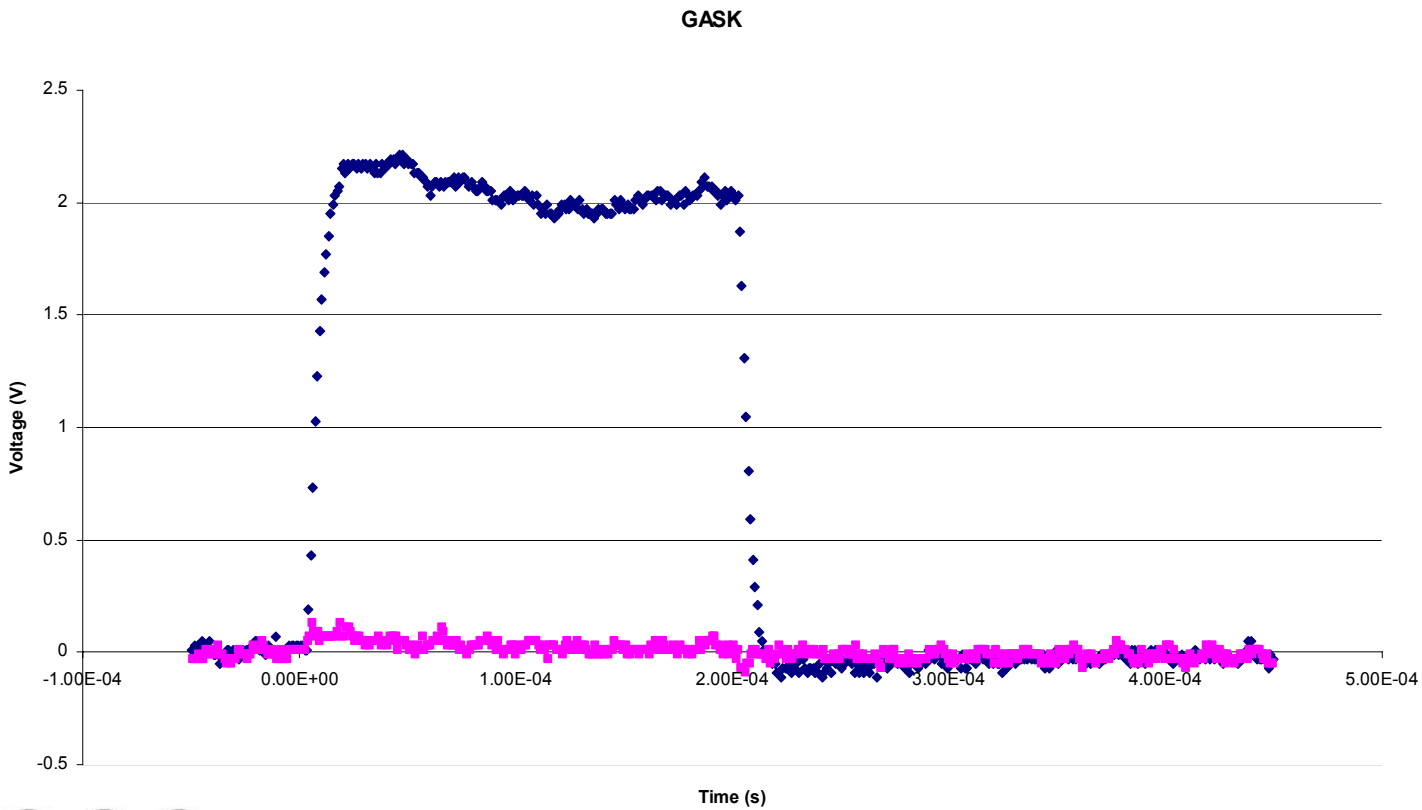

ENERGY RECOVERY WORKS (cont'd)

With energy recovery the required linac rf power is ~ 16 kW, nearly independent of beam current. It rises to ~ 36 kW with no recovery at 1.1 mA.

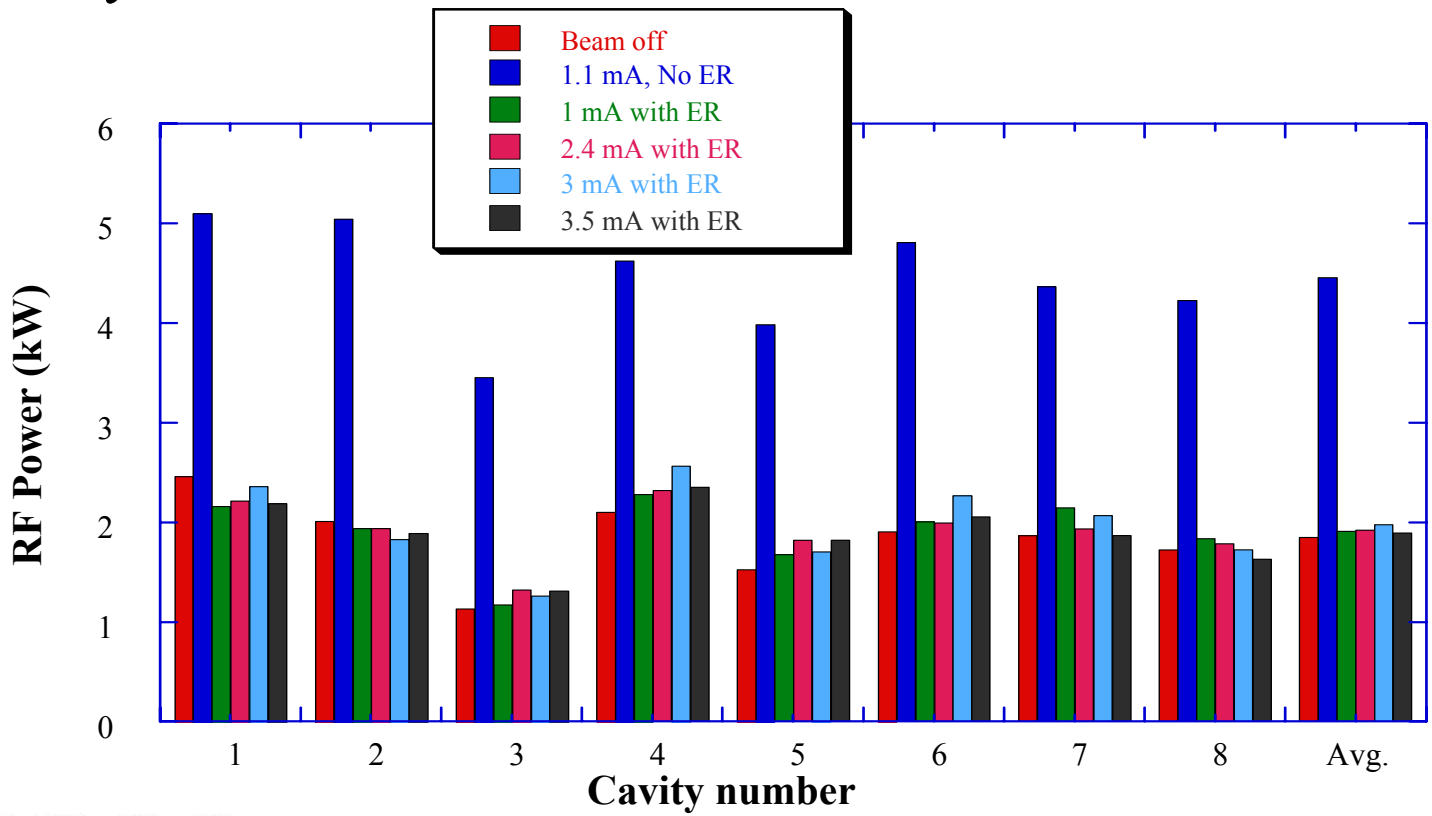

ENERGY RECOVERY WORKS (cont'd)

With energy recovery the required rf power is 25 kW independently of beam current. With no recovery the required rf power at 4 mA would have been 160 kW.

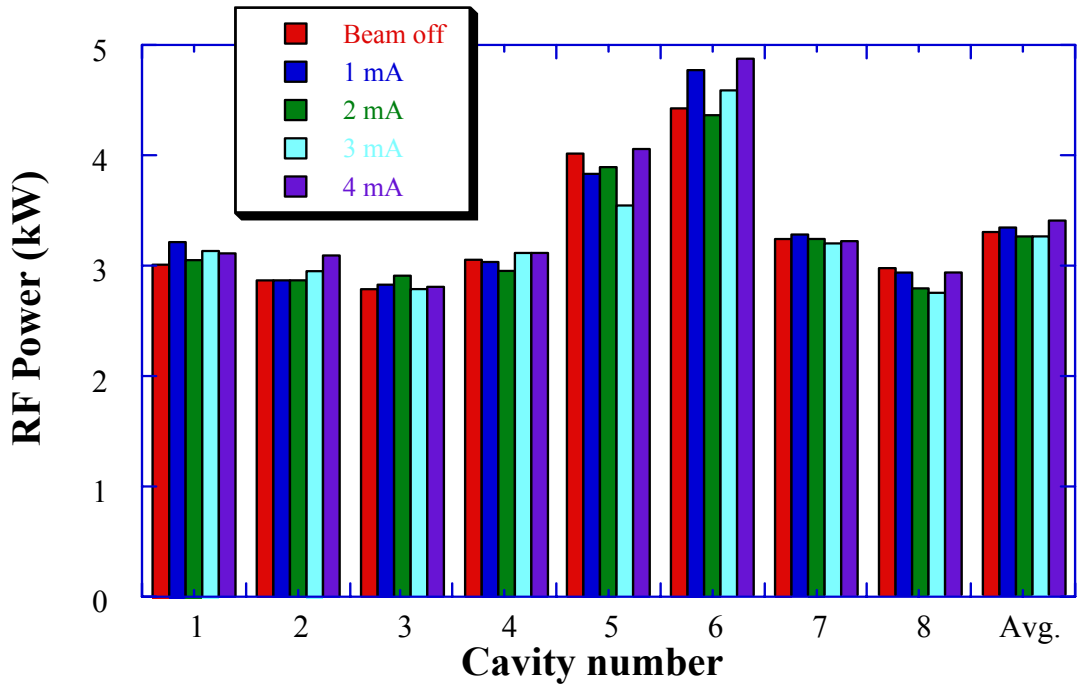

Jefferson Lab

BENEFITS OF ENERGY RECOVERY

AC Power Draw in IR Demo: 1.7 kW FEL output

Beam 5 mA, 48 MeV

Component	With Energy Recovery (measured)	Without Energy Recovery (estimates)	
Injector RF	220 kW	220 kW	
Linac RF	175 kW	700 kW	
He Refrigerator	70 kW	70 kW	(Estimated)
Magnets, Computers, etc.	43 kW	23 kW	
Total	508 kW	1013 kW	

G. R. Neil, FEL Conference 1999, Hamburg Germany.

Jefferson Lab

BENEFITS OF ENERGY RECOVERY

AC Power Draw in IR Upgrade: 10 kW FEL output

Beam 10 mA, 160 MeV

Component	With Energy Recovery (estimates)	Without Energy Recovery (estimates)	
Injector RF	350 kW	350 kW	
Linac RF	525 kW	4200 kW	
He Refrigerator	100 kW	100 kW	
Magnets, Computers, etc.	100 kW	40 kW	
Total	1075 kW	4690 kW	

G. R. Neil, FEL Conference 1999, Hamburg Germany.

Jefferson Lab

RF TO BEAM EFFICIENCY

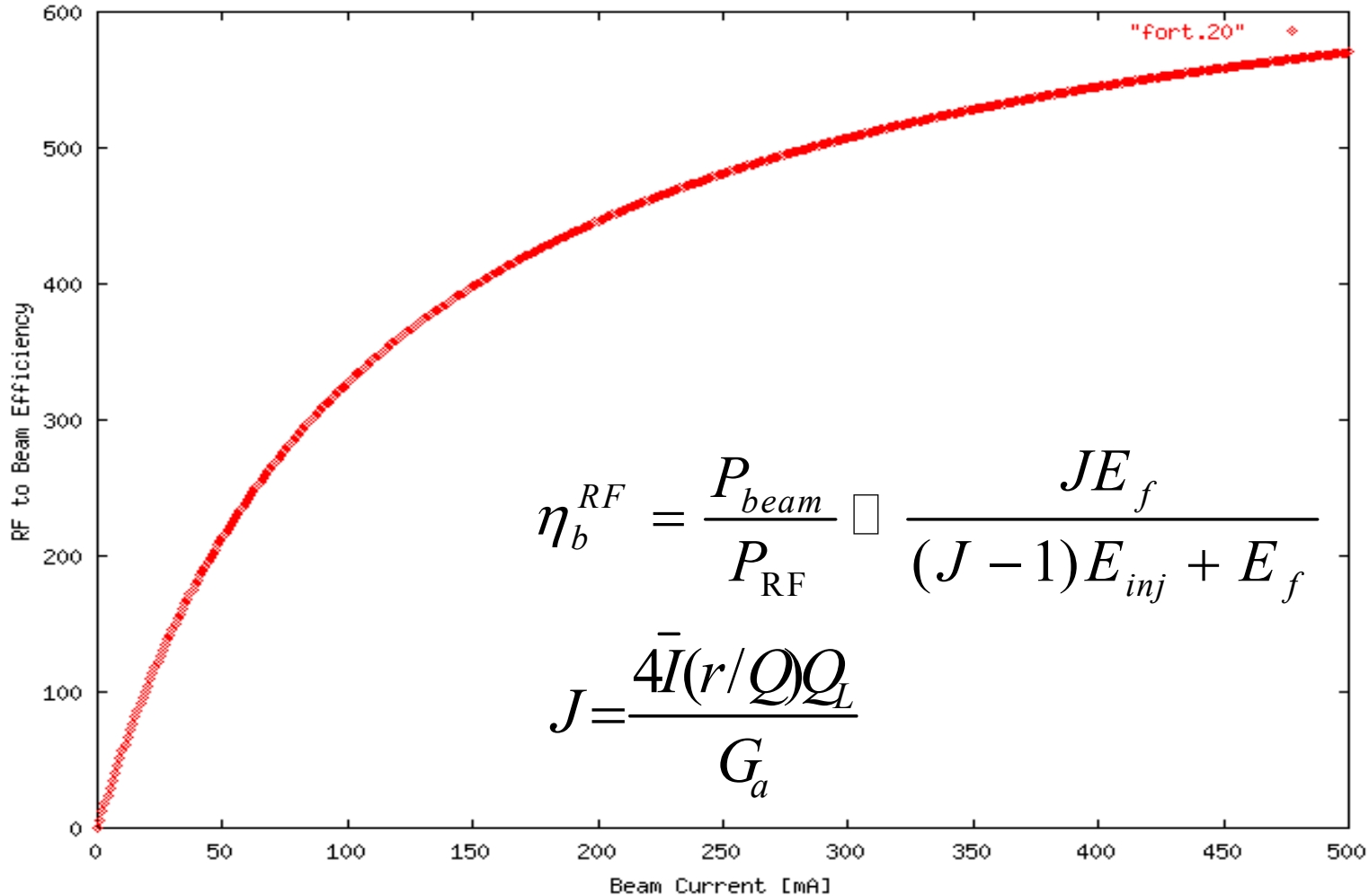

$$\eta_b^{RF} = \frac{P_{beam}}{P_{\mathrm{RF}}} \square \frac{JE_f}{(J-1)E_{inj} + E_f}$$

$$J = \frac{4\bar{I}(r/Q)Q_L}{G_a}$$

Jefferson Lab

SUMMARY OF BENEFITS

- Required rf power becomes nearly independent of beam current.
- Increases overall system efficiency.
- Reduces electron beam power to be disposed of at beam dumps (by ratio of E_{fin}/E_{inj}).
- More importantly, reduces induced radioactivity (shielding problem) if beam is dumped below the neutron production threshold.

Jefferson Lab

ELECTRON LINAC-ON-PROTON RING COLLIDER REASONING AND POINT DESIGN

- Input parameters: $E_e = 3$ GeV and $E_p = 15$ GeV

- Reasoning:
  - Set electron beam size at IP based on projected source performance
  - Set proton beam parameters at Laslett tuneshift limit
  - Determine number of electrons per bunch
  - Determine collision frequency

ELECTRON BEAM PARAMETERS AT IP

- Assume $\varepsilon_n \sim 60\ \mu m$ at $Q \sim 1$ nC

  (Emittance dilution in linac will be addressed below)

- At $E_e = 3$ GeV, $\varepsilon_e^* = 10$ nm
- For $\beta^* = 12$ cm, $\sigma_e^* = 35\ \mu m$

  (Round beams are assumed for electrons and protons)

Jefferson Lab

PROTON BEAM PARAMETERS

- For $\sigma_z \approx \beta_p^*$ Laslett tuneshift sets a limit on N_p / σ_p^{*2}

$$\Delta\nu_{\mathrm{L}} = \frac{N_{\mathrm{p}} r_{\mathrm{p}}}{4\,\pi\gamma_{\mathrm{p}}^3 \varepsilon_x^*} \frac{C}{\sqrt{2\pi}\,\sigma_z}$$

- Without proton cooling we assume $\Delta\nu_L \leq 0.004$

- For $\varepsilon_{n,p}$ = 3 μm (LHC, RHIC), β^* = 6 cm =>

$\sigma_p^* = 107\mu m$

and

$N_p = 3 \times 10^{10}$

at the Laslett tuneshift limit.

Jefferson Lab

NUMBER OF ELECTRONS PER BUNCH

N_e can be limited by:

- Beam-beam tuneshift of proton beam

$$\xi_p = \frac{N_e r_p \beta_p^*}{4\pi\gamma_p \sigma_e^{*2}}$$

For $\xi_{pr} = 0.004$, $N_e = 1.1 \times 10^{10}$

- Emittance growth due to single-bunch transverse BBU in the linac

$$\eta = \frac{L r_e N_e W_{\perp 0}}{\kappa_0 (\gamma_f - \gamma_0)} \ln \frac{\gamma_f}{\gamma_0}$$

For $\sigma_z = 1$ mm, $\lambda_\beta = 2\pi/k_0 = 50$ m, $N_e = 1.5 \times 10^{11}$
(BNS damping could be used if this becomes the limit.)

COLLISION FREQUENCY

- Maximize f_c subject to constraints:
  - Parasitic collisions
  - User requirements
  - Electron cloud effect
- Assume bunch separation of 6.66 nsec or

$$f_c = 150 \text{ MHz}$$

LUMINOSITY W/OUT PROTON COOLING

$$L = \frac{N_e N_p f_c}{2\pi[\sigma_e^{*2} + \sigma_p^{*2}]}$$

$N_e = 1.1 \times 10^{10}$

$N_p = 3.0 \times 10^{10}$

$f_c = 150$ MHz

$\sigma_e^* = 35$ μm

$\sigma_p^* = 107$ μm

$L = 6.2 \times 10^{31}$ cm^{-2} sec^{-1}

Jefferson Lab

EPIC PARAMETER TABLE

Parameter	Units	EPIC L-R	EPIC L-R	EPIC L-R	EPIC L-R
E_e	GeV	3	3	5	5
E_p	GeV	15	15	50	50
Proton cooling	—	No	Yes*	No	Yes
N_e	ppb	1.1×10^{10}	1.1×10^{10}	1.1×10^{10}	1.1×10^{10}
N_p	ppb	3×10^{10}	1×10^{11}	1×10^{11}	1×10^{11}
f_c	MHz	150	150	150	150
σ_e^*	μm	35	35	25	25
σ_p^*	μm	107	58	60	25
ε_e^*	nm	10	10	6	6
ε_p^*	nm	200	33.6*	36	6.25
β_e^*	cm	12	12	10	10
β_p^*	cm	6	10	10	10
σ_z^p	cm	6	10	10	10
σ_z^e	mm	1	1	1	1
ξ_{pr}	—	0.004	0.0068*	0.004	0.004
? ν_L	—	0.004	0.05*	0.004	0.024
$\bar{I}_e$	A	.264	.264	.264	.264
$\bar{I}_p$	A	.72	2.4	2.4	2.4
L	$cm^{-2}sec^{-1}$	6.2×10^{31}	5.7×10^{32}	6.2×10^{32}	2.1×10^{33}

Jefferson Lab

A POINT DESIGN WITH PROTON COOLING

- Electron beam parameters remain the same
- Laslett and beam-beam tuneshifts allowed to reach

$$\Delta\nu_L \leq 0.05$$

$$\xi_p \leq 0.05$$

- Laslett tuneshift sets ratio N_p / σ_p^{*2}
- Optimization now as follows:
  - Determine limit on N_p
  - Determine minimum σ^* at the Laslett tuneshift

Jefferson Lab

NUMBER OF PROTONS PER BUNCH

N_p can be limited by:

- Emittance growth of electrons due to single round-beam collision
- Proton ring instabilities

EMITTANCE GROWTH DUE TO A SINGLE COLLISION

- A single collision disrupts the electron beam and causes emittance growth.
- Electron beam with degraded phase space has to be recirculated and energy recovered.
- Adiabatic antidamping can result in scraping and beam loss in the cryomodules.
- Therefore, amount of tolerable beam loss at the linac exit imposes a limit on tolerable emittance growth due to collision. This in turn imposes a limit on N_p.

EMITTANCE GROWTH (cont'd)

- Assume maximum tolerable beam loss:

$$4 \times 10^{-6} \quad (1\ \mu A/250\ mA)$$

- Assume gaussian distribution, aperture = 7 cm, average β-function in linac ~ 50 m, then

$$\varepsilon_n < 800\ \mu m$$

- In the small disruption limit:

$$\varepsilon_n^2 = \varepsilon_{0,n}^2 + (0.194\ r_e\ N_p)^2$$

- For $\varepsilon_{0,n} = 60\ \mu m$, $\varepsilon_n = 800\ \mu m$,

$$N_p \leq 1.5 \times 10^{12}\ ppb$$

Determine proton beam parameters (cont'd)

- We assume

$$N_p \sim 1 \times 10^{11}$$

  same as LHC, RHIC.

  (We will check collective effects later.)

- At the Laslett tuneshift

$$\sigma_p^* = 58\ \mu m$$

- For $\beta^* = 0.1$ m,

$$\varepsilon_p^* = 33.6\ nm \text{ or } \varepsilon_n = 0.54\ \mu m$$

At $N_e \sim 1.1 \times 10^{10}$, $\xi_{pr} = 0.0068$

LUMINOSITY WITH PROTON COOLING

$$L = \frac{N_e N_p f_c}{2\pi[\sigma_e^{*2} + \sigma_p^{*2}]}$$

$N_e = 1.1 \times 10^{10}$

$N_p = 1.0 \times 10^{11}$

$f_c = 150$ MHz

$\sigma_e^* = 35$ μm

$\sigma_p^* = 58$ μm

$L = 5.7 \times 10^{32}$ cm^{-2} sec^{-1}

Jefferson Lab

DEPENDENCE ON ENERGIES

Examine $E_e = 5$ GeV and $E_p = 50$ GeV

W/out cooling	With cooling
$N_e = 1.1 \times 10^{10}$	$N_e = 1.1 \times 10^{10}$
$N_p = 1.0 \times 10^{11}$	$N_p = 1.0 \times 10^{11}$
$f_c = 150$ MHz	$f_c = 150$ MHz
$\sigma_e^* = 25\ \mu m$	$\sigma_e^* = 25\ \mu m$
$\sigma_p^* = 60\ \mu m$	$\sigma_p^* = 25\ \mu m$
$L = 6.2 \times 10^{32}\ cm^{-2}\ sec^{-1}$	$L = 2.1 \times 10^{33}\ cm^{-2}\ sec^{-1}$

Jefferson Lab

ACCELERATOR PHYSICS ISSUES OF PROTONS

Intrabeam Scattering: Transverse

$$\tau_{tr} = \frac{2\pi}{\Lambda}\gamma_p^3\beta_p\frac{R^2}{r_p^2}\left(\frac{\varepsilon_x}{\beta_{av}}\right)^{5/2}\frac{\sigma_z}{c}\frac{1}{N_p}$$

At 15 GeV

w/out cooling: τ_{tr} = 33043 sec

with cooling: τ_{tr} = 79 sec

At 50 GeV

w/out cooling: τ_{tr} = 5.9 x 10^5 sec

with cooling: τ_{tr} = 1162 sec

ACCELERATOR PHYSICS OF PROTONS (cont'd)

Intrabeam Scattering: Longitudinal

$$\tau_{long} = \frac{8\gamma_p^3 \sigma_z \varepsilon_x^{3/2} (\sigma_E / E)^2}{c r_p^2 N_p \Lambda} \sqrt{\frac{C}{2\pi \nu_x}}$$

At 15 GeV

w/out cooling: τ_{tr} = 1.25x10^3 sec @ σ_E/E=1.5e-3

with cooling: τ_{tr} = 30 sec @ σ_E/E=1.5e-3

At 50 GeV

w/out cooling: τ_{tr} = 1.1x 10^4 sec @ σ_E/E=3e-3

with cooling: τ_{tr} = 900 sec @ σ_E/E=3e-3

ACCELERATOR PHYSICS OF PROTONS (cont'd)

Collective Effects

- Longitudinal mode coupling or microwave instability

$$\left|\frac{Z_{\square}}{n}\right| = \sqrt{\frac{\pi}{2}}\,\frac{Z_0 \alpha \gamma \sigma_\delta^2 \sigma_z}{N_p r_p}$$

For $\left|Z_{\square} / n\right| \sim 0.25\ \Omega$ (LHC, Tevatron)

$N_p < 6 \times 10^{12}$

- Transverse mode coupling instability (for $\sigma_z > b$)

$$\left|Z_\perp\right| = Z_0 \frac{\pi \gamma \omega_s \sigma_z}{3 N_p r_p \beta_{av} \omega_0}$$

For $|Z_{tr}| \sim 5 \times 10^4\ \Omega$ (scaled from LHC)

$N_p < 1.8 \times 10^{12}$

Jefferson Lab

ACCELERATOR PHYSICS OF ERL

- Source
- Accelerator Transport
  - Longitudinal & Transverse Matching
  - Beam Loss
- Coherent Synchrotron Radiation
- RF Control & Stability
- Higher Order Modes (HOM) & Beam Breakup (BBU)
  - HOM Power Dissipation
  - Multipass-Multibunch BBU

POLARIZED ELECTRON LINAC SOURCES

- For a polarization of 80% extensive laser R&D is necessary
- For a polarization of 30% commercial lasers are available
- To achieve sufficient lifetime vacuum is of paramount importance
- Photo cathode has to be cooled
- Bunch charge of 17 nC can be delivered from a highly doped GaAs photo cathode
- Acceleration voltage should at least be 200 kV
- Beam emittance is not an issue; 1.4 mm-mrad thermal emittance expected at 17 nC, 170 mA
- Required emittance is ~60 mm-mrad at 1.7nC, 264 mA

Hartmann, Sinclair et al., eRHIC Workshop, April'99

Jefferson Lab

ACCELERATOR TRANSPORT

- Longitudinal Matching
- Transverse Matching
- Beam Loss

LONGITUDINAL MATCHING

- Requirements
  - high peak current (short bunch) at FEL
  - small energy spread at dump

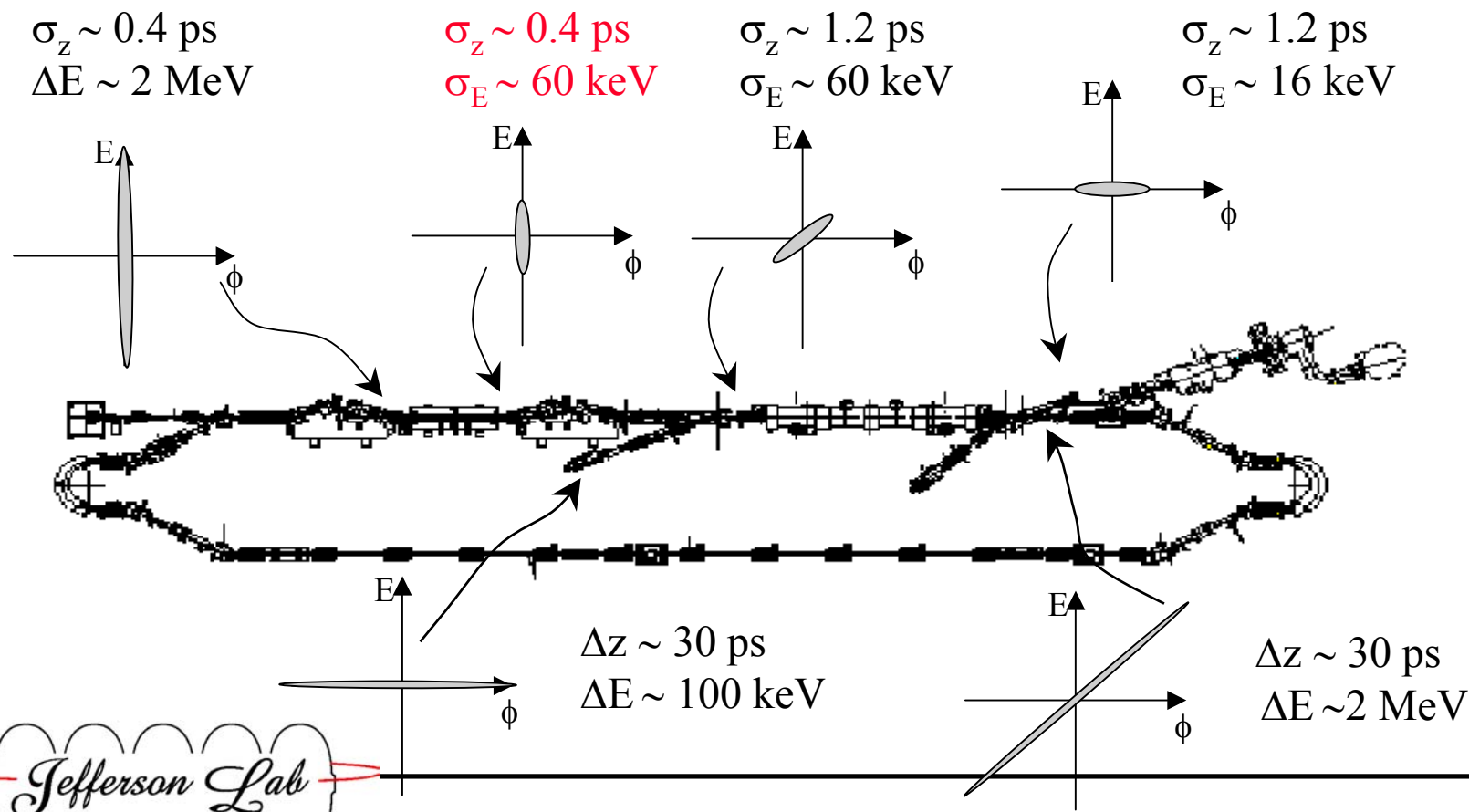

Jefferson Lab

TRANSVERSE MATCHING

- Provide appropriate transverse phase space matching into the "interaction region"
  - For IRFEL, good overlap between electron beam and optical mode
  - For EPIC, good overlap to maximize luminosity
- Transport beam with likely degraded phase space around the recirculator
  - For IRFEL, transport and energy recover large momentum spread
  - For EPIC, transport and energy recover disrupted electron beam
- Deal with adiabatic antidamping in the linac

TRANSVERSE MATCHING (cont'd)

- Dynamic range of linac constrained by ability to confine two beams of different energies in the same focusing structure
- Ratio of linac E_{inj}/E_{fin} is constrained so as to avoid underfocusing the high energy and overfocusing the low energy beams.
- Ratio of roughly 10/1 is conservative design choice; depends on linac length and distance between focusing elements.
- Energy ratio in existing designs:
  - JLAB IRFEL: 5/1
  - JLAB FEL UPGRADE: 20/1
  - eRHIC Linac: 10/1

D. Douglas, Private Comm. & PAC '93, '97 & LINAC 2000

BEAM LOSS

- Loss inside cryomodule $\leq 1\,\mu A$ (CHL)
- Loss at wiggler entrance $< 1\,nA$
- Loss everywhere else $\leq 1\,\mu A$ (BLMs)

$\Longrightarrow$ At energies > 10 MeV, total beam loss $\leq 2\,\mu A$

- Scaling from these numbers may be ok, but no detailed model for beam loss exists yet.

COHERENT SYNCHROTRON RADIATION (CSR)

- Radiation wavelength longer than bunch length: coherent emission.
- Both transverse and longitudinal self-forces can cause emittance growth: potentially serious for high brightness beam quality preservation.
- Developed the first self consistent, 2d simulation (**R. Li, PAC 1999**).
- Experimental data from IRFEL and CTF II Facility benchmark code.

RF STABILITY

- RF Control
- RF Instabilities

ENERGY RECOVERY RF PHASOR DIAGRAM

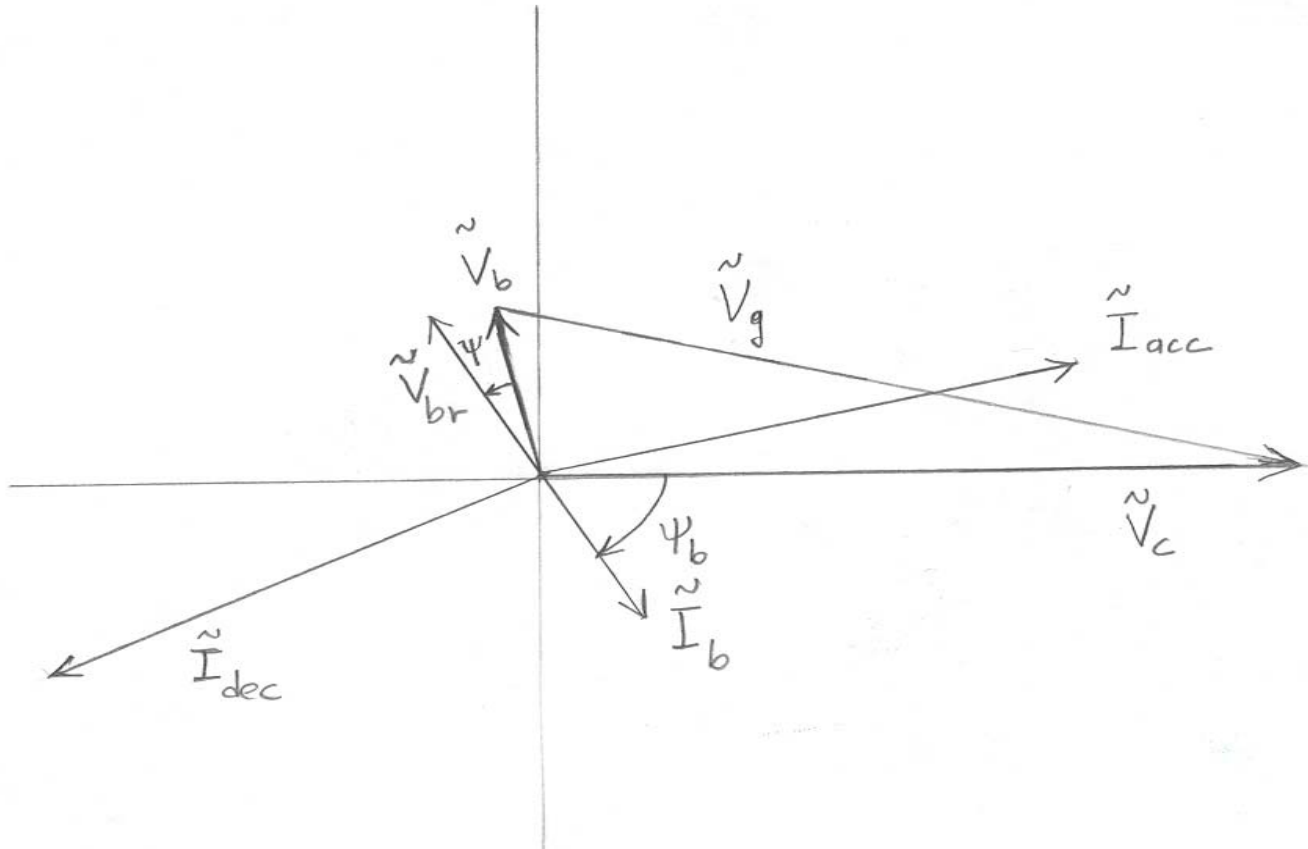

RF CONTROL

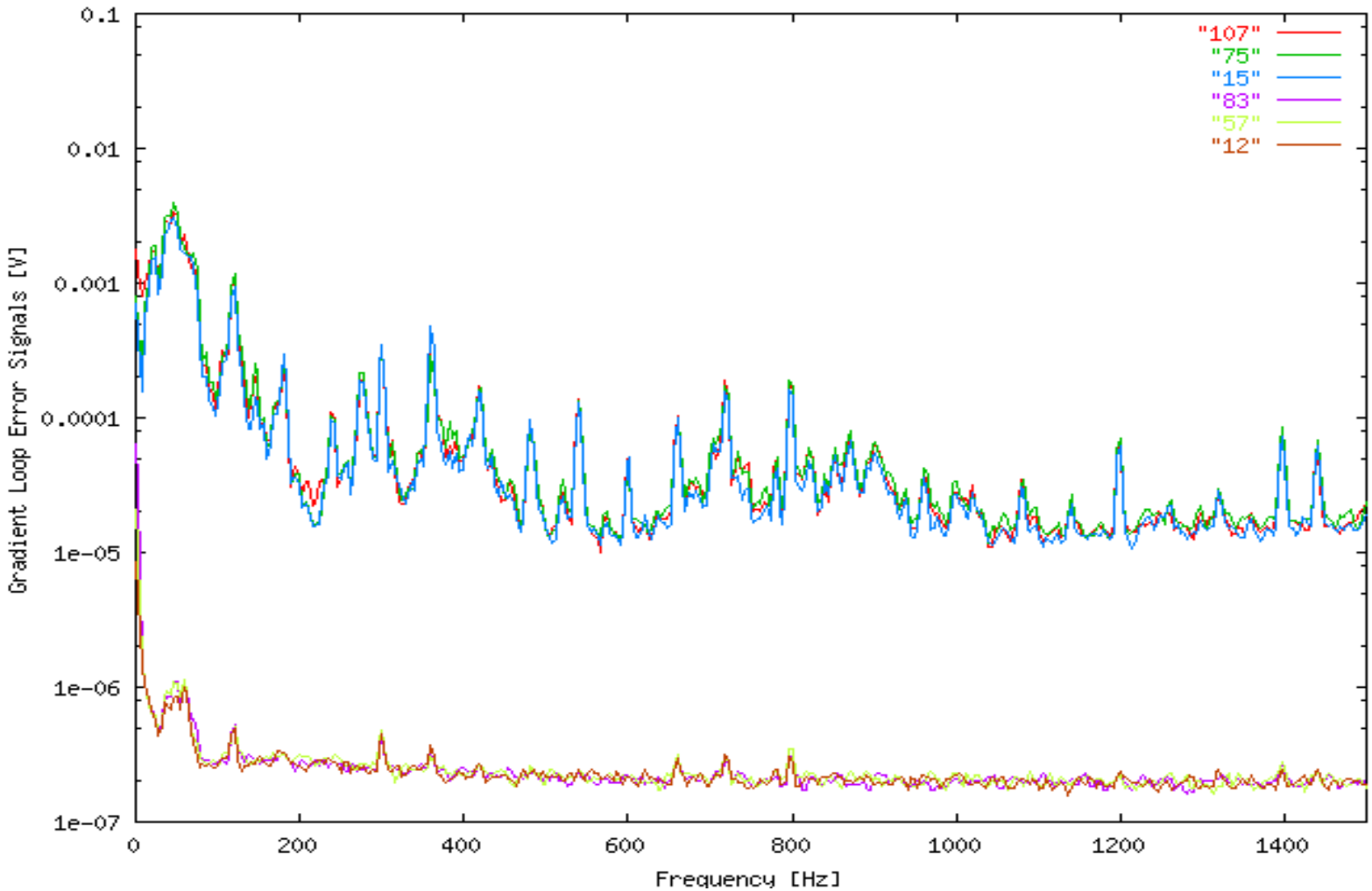

Jefferson Lab

RF INSTABILITIES

- Instabilities can arise from fluctuations of cavity fields.
- Two effects may trigger unstable behavior:
  - Beam loss which may originate from energy offset which shifts the beam centroid and leads to scraping on apertures.
  - Phase shift which may originate from energy offset coupled to M_{56} in the arc.
- Instabilities predicted and observed at LANL, a potential limitation on high power recirculating, energy recovering linacs.

RF STABILITY FLOW CHART

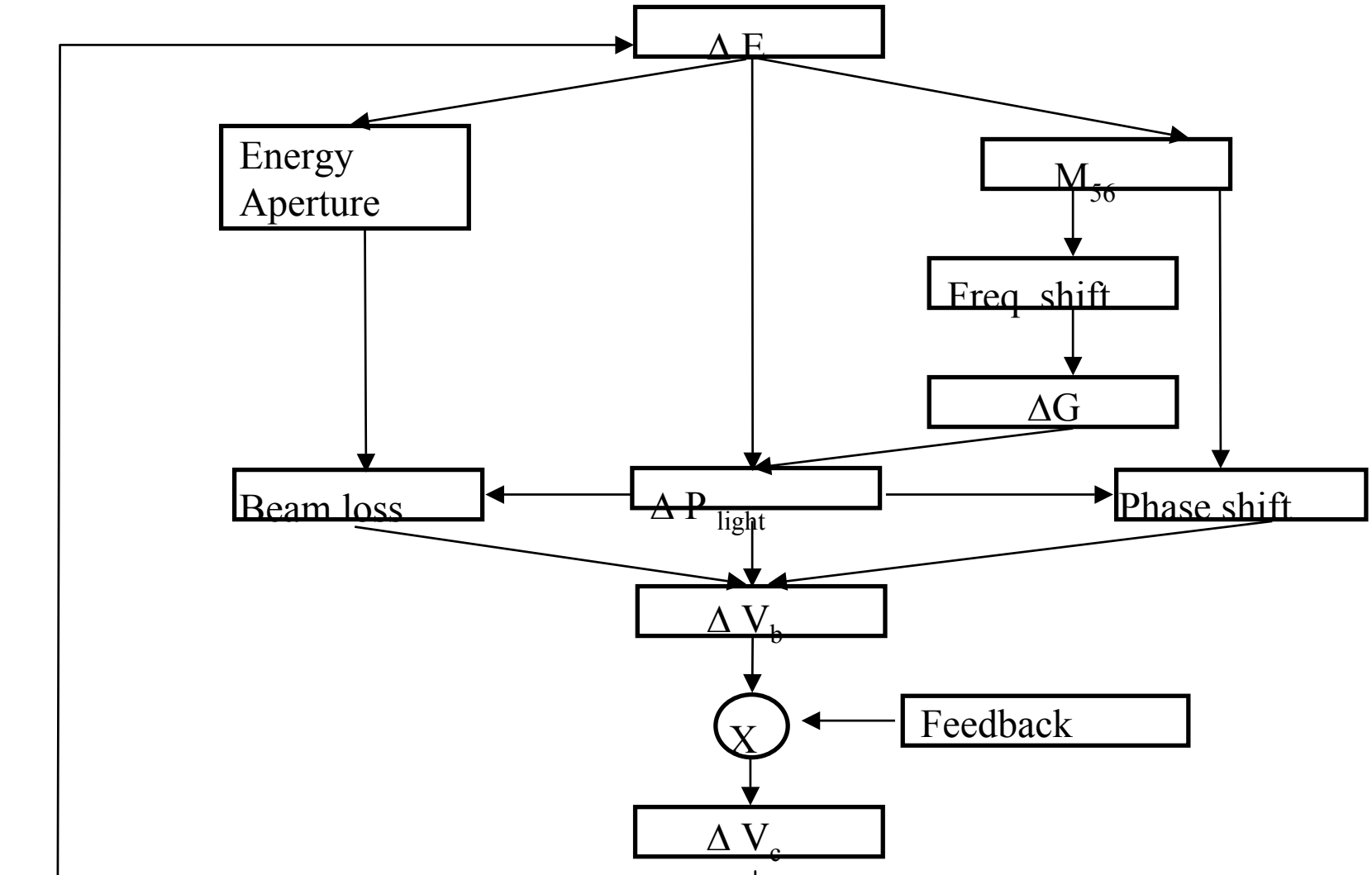

Jefferson Lab

RF STABILITY MODEL

- Developed model of the system that includes beam-cavity interaction, low level rf feedback (and FEL); it was solved analytically and numerically.

- Model predicts instability exists in the IRFEL, however is controlled by rf feedback.

- When FEL is off, experimental data from the IRFEL are quantitatively consistent with the model. (With FEL on, model reproduces data only qualitatively.)

HIGHER ORDER MODES & BEAM BREAKUP

- Single-bunch, single-pass effects: limit bunch charge
  - Energy spread induced by variation of longitudinal wakefield across bunch
  - Emittance growth induced by single-bunch transverse BBU (not important for JLab IRFEL)

    $\Rightarrow$ Minimize strength of impedance source (SRF better!)
- Multibunch, multipass effects: limit average current
  - Transverse and longitudinal HOMs: a stability concern
- Power in HOMs, primarily longitudinal: depends on product of bunch charge and average current
  - Not a hard limit, but may impose design choices to improve cryogenic efficiency

HIGHER ORDER MODES

RF spectra sampled from the input waveguide of a cavity.
Black trace: 3.5 mA. White trace: 1.3 mA.

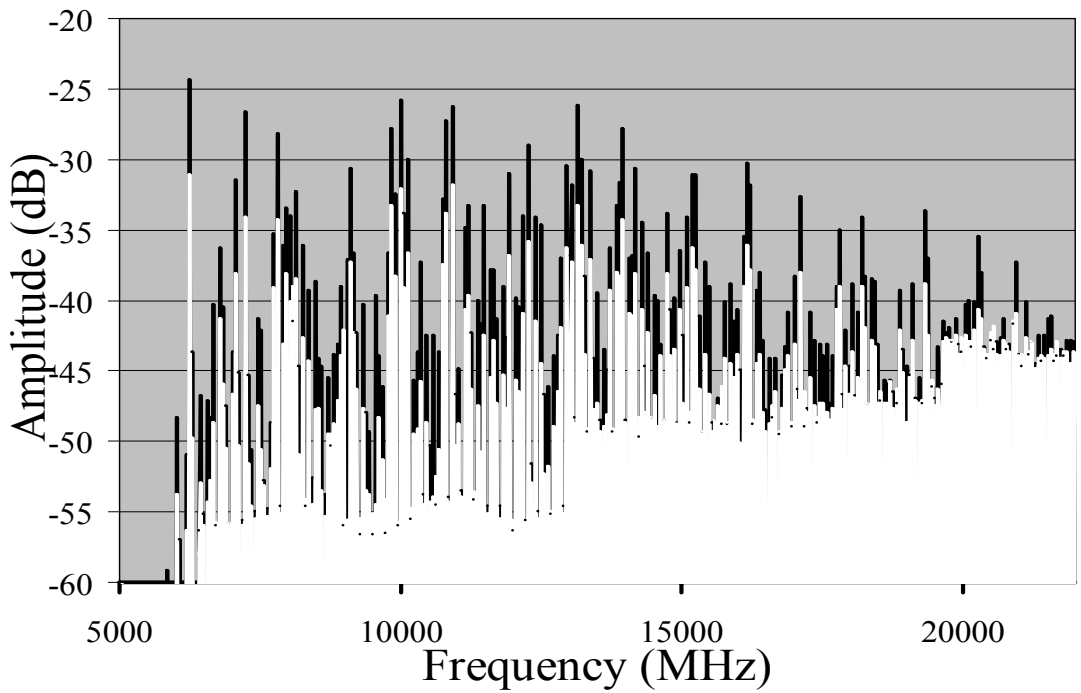

I. Campisi, PAC 1999

Jefferson Lab

HOM POWER DISSIPATION

- For CEBAF cavities, k_{loss} ~5.4 V/pC for σ_z=1 mm
- Power dissipated by the beam is

$$P_{diss} = k_{\square} Q \bar{I}$$

- For I_{ave} = .264 A,

  P ~ 5 kW per cavity

- Induced relative energy spread at 3 GeV is:

  $\sigma_E/E \sim 5 \times 10^{-4}$

Jefferson Lab

"WHERE HAVE ALL THE LOSSES GONE?"

- The fraction of HOM power dissipated on cavity walls increases with HOM frequency, due to $Q_0 \sim \omega^2$ degradation from BCS theory. It can limit I_{ave} and I_{peak} due to finite cryogenic efficiency
- We developed a model that estimates fraction of power dissipated on the walls and specifies HOM-power extraction efficiency required
- We found
  - > 90% of HOM power is in modes > 100 GHz
  - Power dissipated on the cavity walls is a strong function of bunch length, $\sigma^{-5/2}$
  - "Multiple reflection model suggests that Q_{ext} ~100 may in fact be possible due to beam pipe openings
- Engineering studies on HOM absorbers are recommended

Jefferson Lab

MULTIPASS BEAM BREAKUP

- Recirculating beam through a linac cavity can lead to transverse instability
  - Transverse displacement on successive recirculations can excite HOMs that further deflect initial beam
  - Recirculated beam and cavities form a feedback loop
  - For $I > I_{th}$ feedback can be driven unstable
  - Effect is worsened by higher Q's of modes of a SRF structure

MULTIPASS BBU (cont'd)

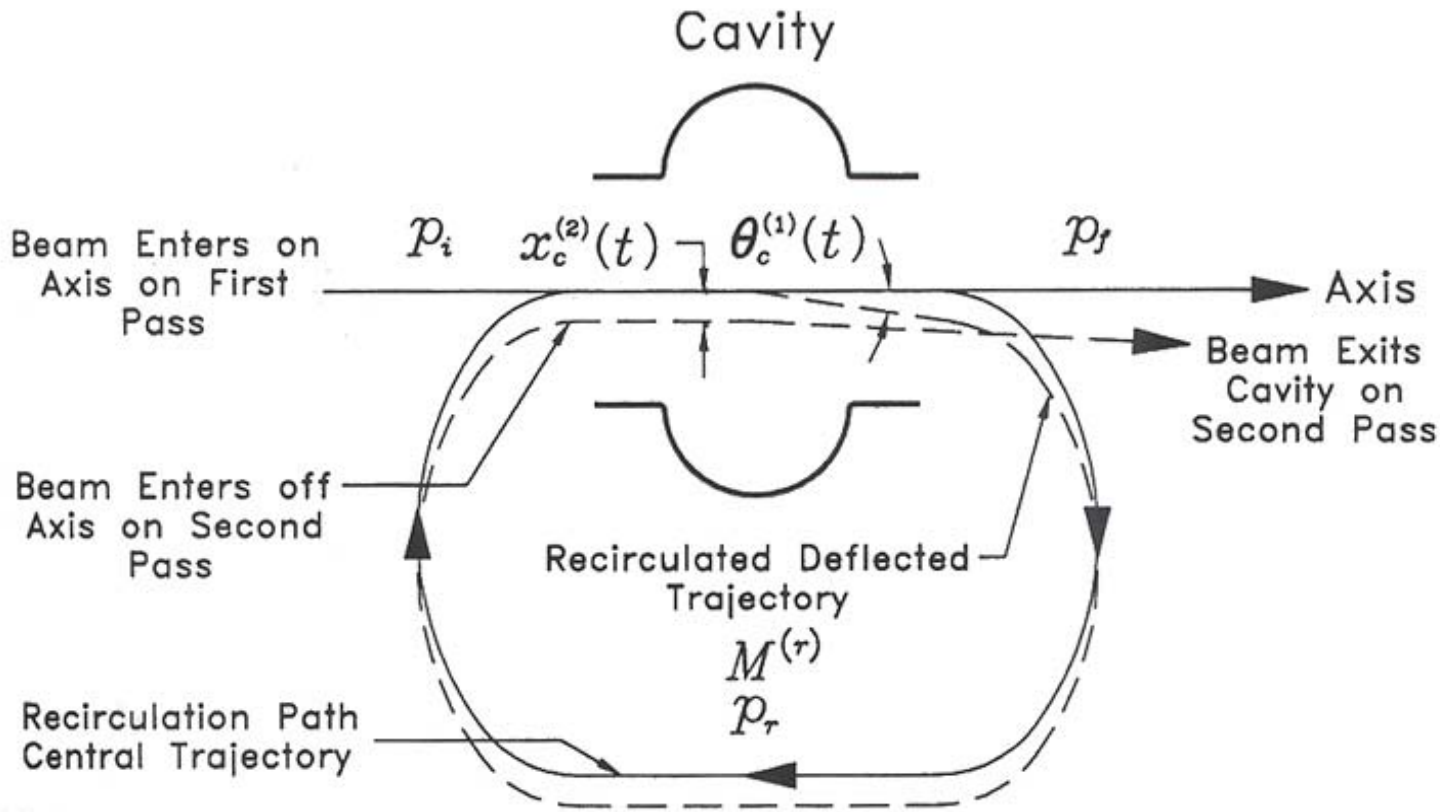

MULTIPASS BBU (cont'd)

- TDBBU: 2d beam breakup code used for simulations (**Krafft, Bisognano, Yunn**)
- Simulations of similar linacs with energy recovery give threshold of ~ 100 mA
- Typical growth rate of the instability at ~ 100 mA is ~2 msecs.
- Feedback (similar to B-Factories) possible

LINAC-RING SINGLE BUNCH TRANSVERSE INSTABILITY

- Simulation developed by R. Li during beam-beam studies of linac-ring B-Factories
- Protons and electrons fluid unstable at high disruptions, the "memory" being provided by displacements within proton beam. Looks like cumulative BBU
- When full synchrotron motion included, luminosity decrease was negligible even at large (10-100) electron disruptions
- Based on previous results don't expect a problem for EPIC, but needs to be checked

CONCLUSIONS

- A self-consistent set of parameters has been developed for an Energy Recovery Linac-on-Proton Ring Collider
- Luminosities of several 10^{32} can be attained
- Focused R&D on high current, polarized electrons is strongly suggested
- No major accelerator physics issues are foreseen with the high average currents in energy recovery linacs with SRF technology; however early demonstration experiments would be very useful
- Cornell is seriously looking into the technical possibilities and issues of a high average current, high energy recovery linac for next generation light source (similar parameter space) and JLab is participating. You are not alone!

Jefferson Lab