RF Issues in Energy Recovery Linacs

Jean Delayen

Jefferson Lab
Newport News, VA

EIC Accelerator Workshop
BNL, 26-27 February 2002

Outline

- Energy Recovery Linacs (ERLs)
  - Examples
  - Basic features
- Efficiency of ERLs
  - Power Requirements
- RF Stability
- Higher-Order Modes Issues
- Conclusions

Energy Recovery Linacs

- Energy recovery is the process by which the energy invested in accelerating a beam is returned to the rf cavities by decelerating the same beam.

- There have been several energy recovery experiments to date
  - Stanford SCA/FEL
  - Los Alamos FEL
  - CEBAF front end

- Same-cell energy recovery with cw beam current up to 5 mA and energy up to 50 MeV has been demonstrated at the Jefferson Lab IR FEL. Energy recovery is used routinely for the operation of the FEL as a user facility.

The JLab 1.7 kW IRFEL and Energy Recovery Demonstration

G. R. Neil, et al., "Sustained Kilowatt Lasing in a Free Electron Laser with Same-Cell Energy Recovery," Physical Review Letters, Volume 84, Number 4 (2000)

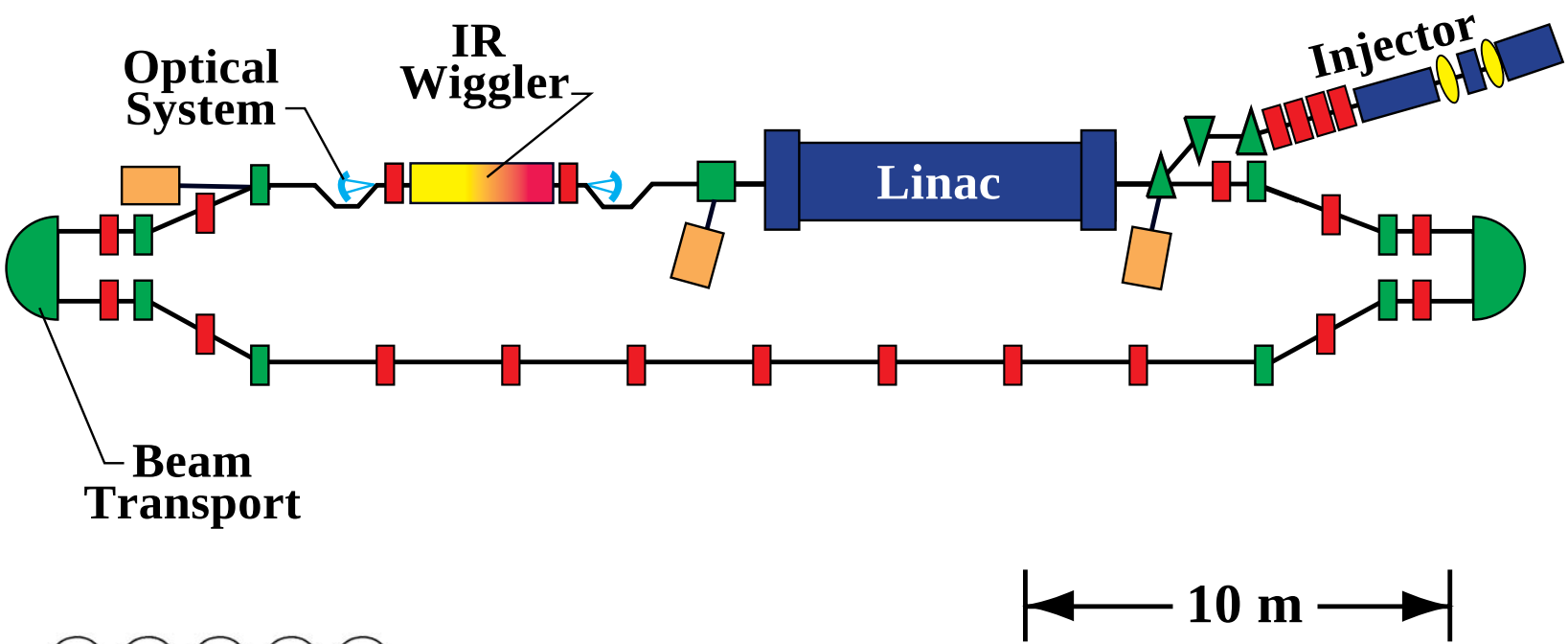

Demonstration of Energy Recovery

Gradient modulator drive signal in a linac cavity measured without energy recovery (signal level around 2 V) and with energy recovery (signal level around 0).

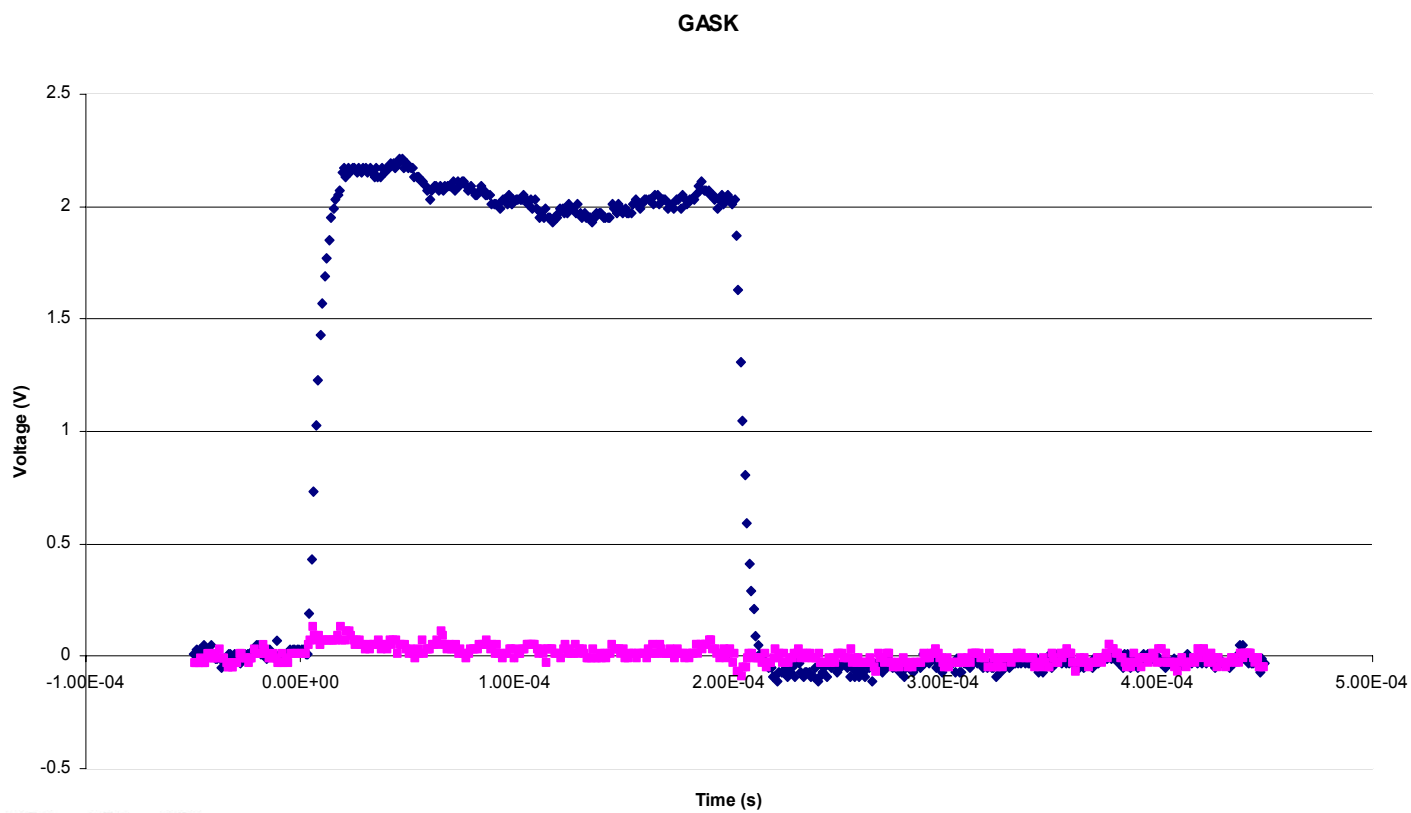

Demonstration of Energy Recovery

With energy recovery the required linac rf power is ~ 16 kW, nearly independent of beam current. It rises to ~ 36 kW with no recovery at 1.1 mA.

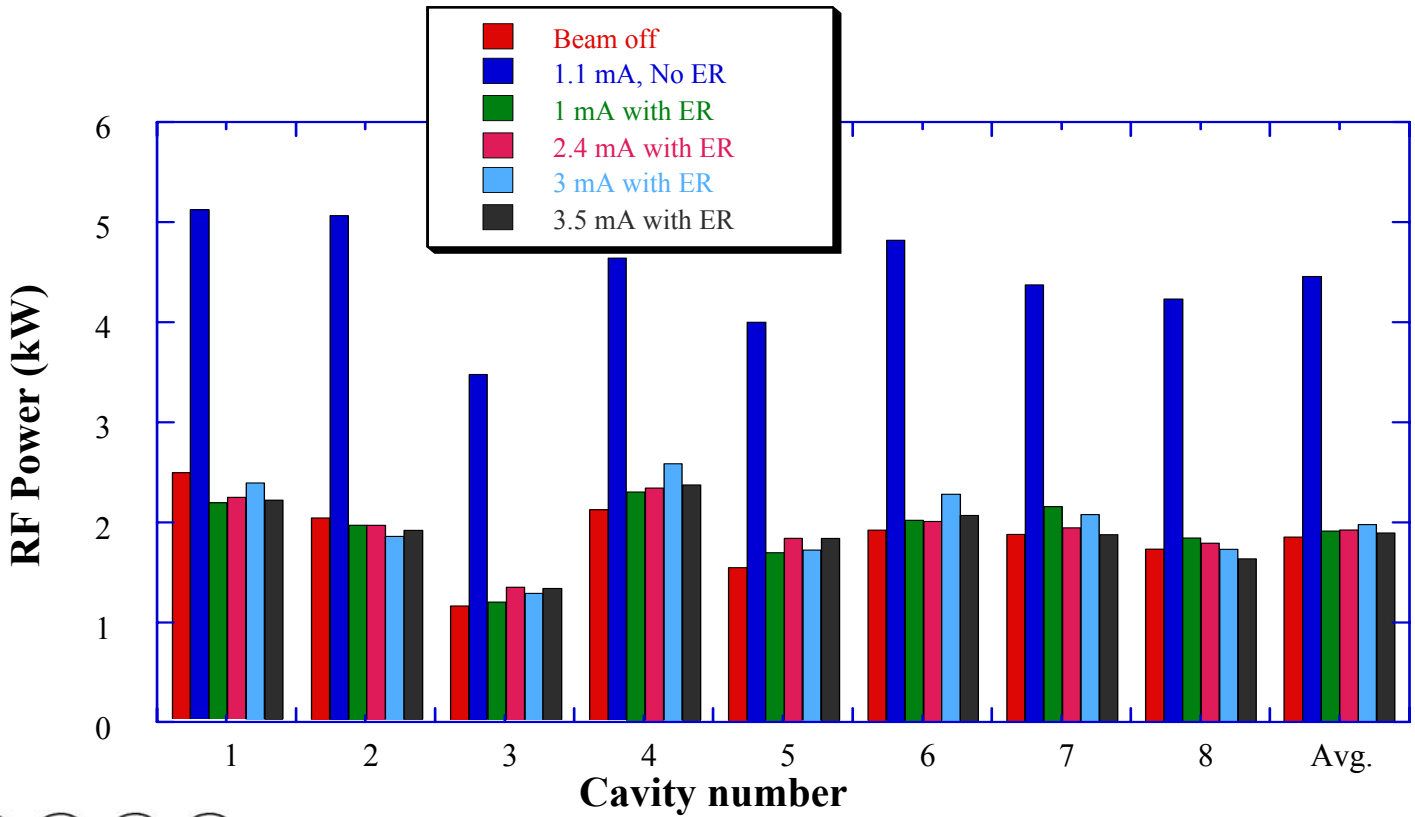

Linac–Ring Collider: Schematic Layout

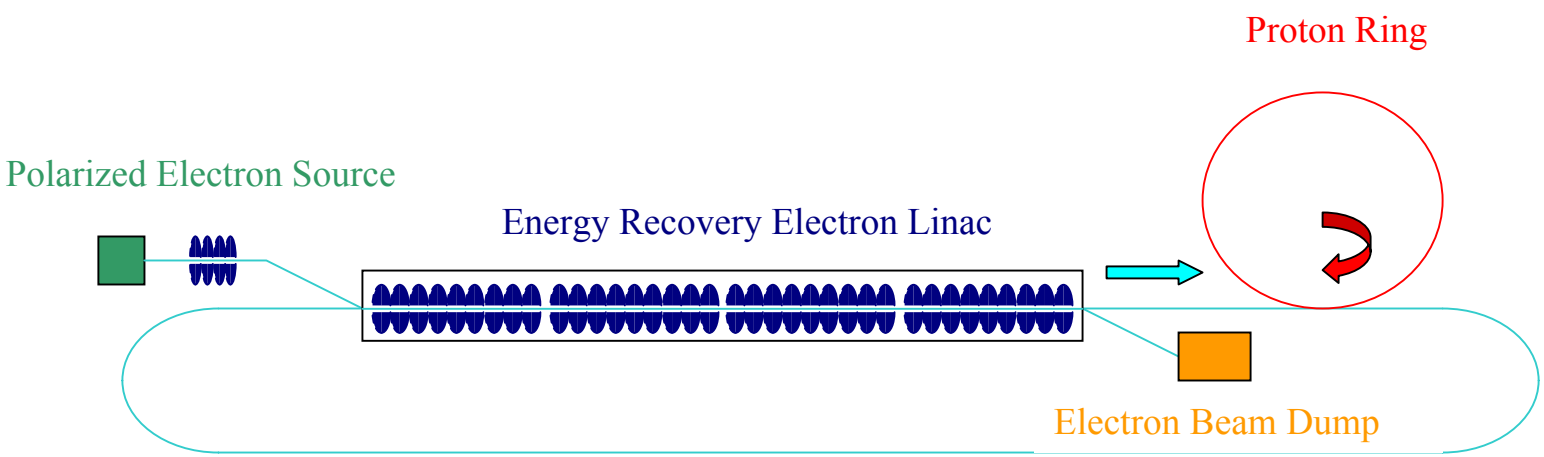

Features of Energy Recovery

- With the exception of the injector, the required rf power is nearly independent of beam current.
  - Increased overall system efficiency.

- The electron beam power to be disposed of at beam dumps is reduced by ratio of E_{max}/E_{inj}.
  - Thermal design of beam dumps is simplified
  - If the beam is dumped below the neutron production threshold, then the induced radioactivity (shielding problem) will be reduced.

RF to Beam Multiplication Factor for an ideal ERL

$$J = \frac{P_b}{P_g} = \frac{\text{Power absorbed by accelerated beam}}{\text{Generator power needed to create and control rf fields}}$$

$$J = \frac{VI}{\frac{V_c^2}{2\left(\frac{R}{Q}\right)Q_L}} = \frac{2I}{E}\left(\frac{R}{lQ}\right)Q_L$$

$$\kappa = \frac{\text{Accelerated beam power}}{\text{Installed rf power}}$$

$$\kappa = \frac{JE_f}{(J-1)E_{inj} + E_f}$$

RF to Beam Multiplication Factor for an ideal ERL

$$E_{acc} = 20\,MV/m$$

$$R/lQ = 1000\,\Omega/m$$

$$E_{inj} = 10\ MeV$$

$$E_f = 7\ GeV$$

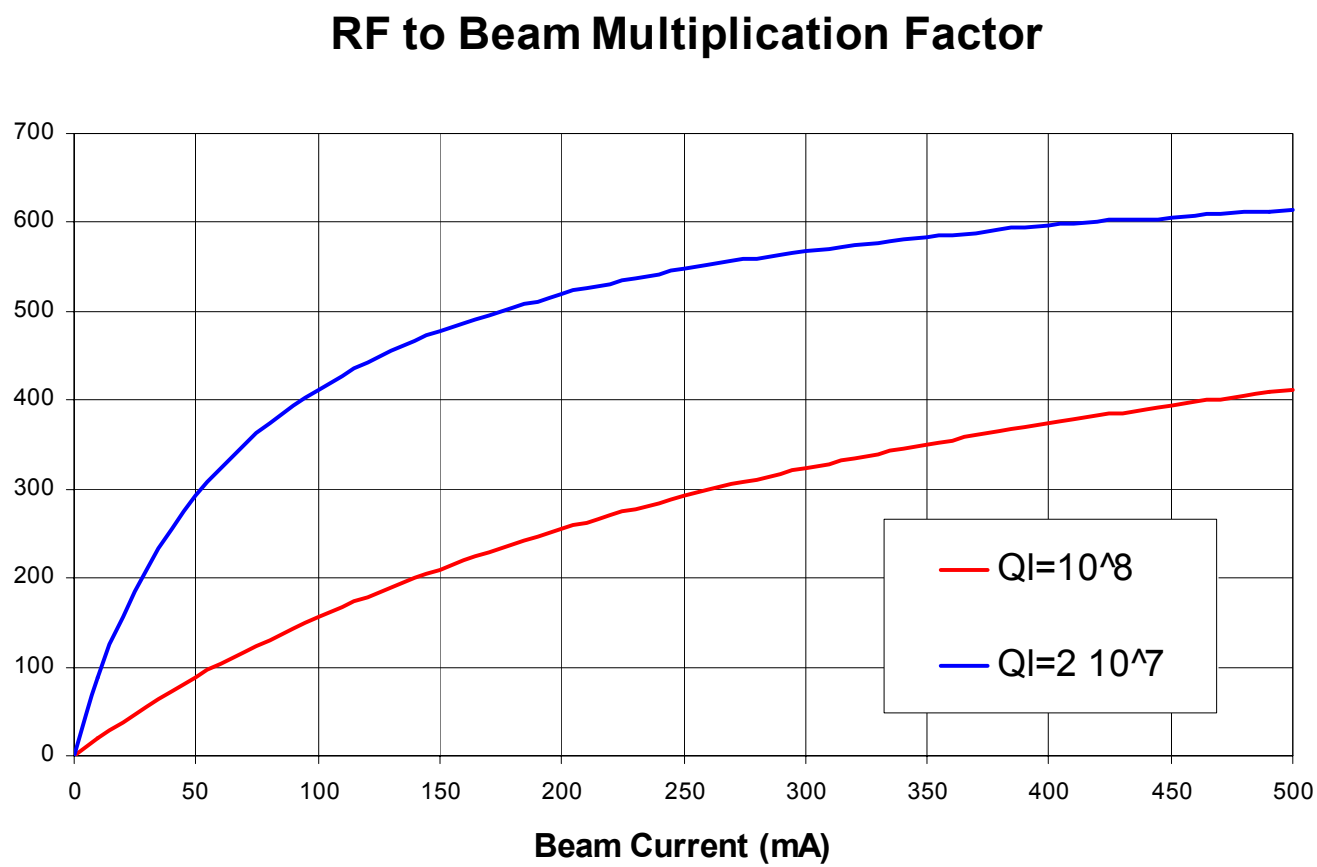

RF to Beam Multiplication Factor for an ideal ERL

- The efficiency of an ERL (as measured by the rf to beam multiplication factor) increases with current
  - Asymptotic value is E_{max}/E_{inj}

- The efficiency increases with the loaded Q of the energy-recovering cavities

Q_{ext} Optimization

- Condition for optimum coupling:

$$\beta_{opt} = \sqrt{(b+1)^2 + \left(2Q_0 \frac{\delta f_d}{f_0}\right)^2}$$

and

$$P_g^{opt} = \frac{V_c^2}{2(r/Q)Q_0}\left[|b+1| + \sqrt{(b+1)^2 + \left(2Q_0 \frac{\delta f_d}{f_0}\right)^2}\right]$$

- In the absence of beam (b=0):

$$\beta_{opt} = \sqrt{1 + \left(2Q_0 \frac{\delta f_d}{f_0}\right)^2}$$

and

$$P_g^{opt} = \frac{V_c^2}{2(r/Q)Q_0}\left[1 + \sqrt{1 + \left(2Q_0 \frac{\delta f_d}{f_0}\right)^2}\right] \square\ 2\pi U\ \delta f_d$$

Generator Power vs. Loaded Q

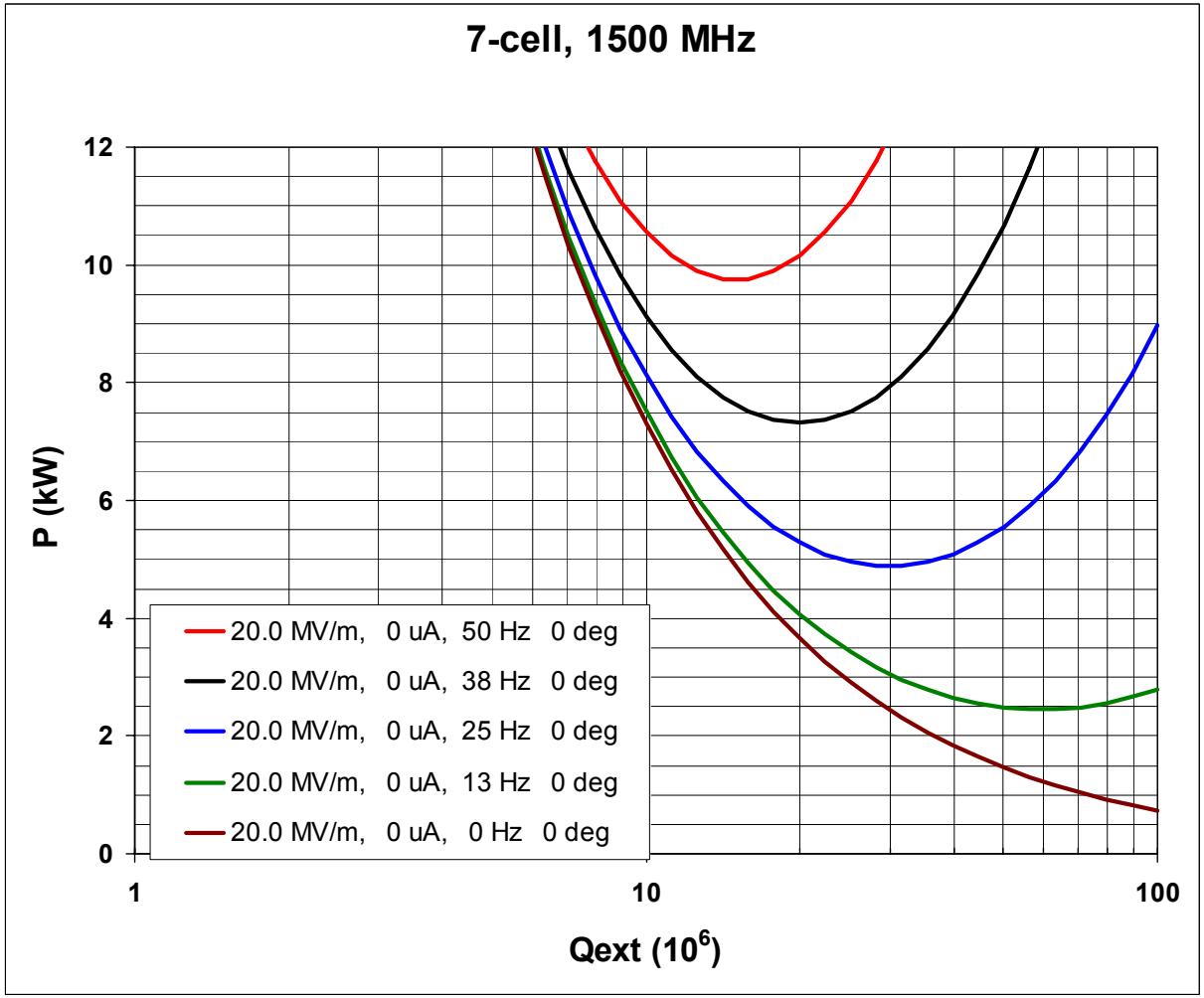

Q_{ext} for ERL Injector and Linac Cavities

- ERL Injector (2-cell) cavities:
- f_0=1300 MHz, Q_0= 5x10^9, V_c= 1 MV per cavity, L_{cav} = 23 cm
- For I_0=100 mA $\Rightarrow$ Optimum Q_L= 4.6x10^4 $\Rightarrow$ P_g = 100 kW per cavity
- Note: I_0V_a = 100 kW $\Rightarrow$ optimization is entirely dominated by beam loading
- ERL linac (9-cell) cavities:
- f_0=1300 MHz, Q_0=1x10^{10}, V_c=20 MV/m, L_{cav}= 1.04 m,
- R/Q=1036 ohms, δf_m=25 Hz
- Resultant beam current, I_{tot} = 0 mA (energy recovery)
- $\Rightarrow$ Optimum Q_L=2.6x10^7 $\Rightarrow$ P_g = 8 kW per cavity with δf_m=25 Hz
- Note: optimization is entirely dominated by amplitude of microphonic noise

Increasing the Efficiency of ERLs

What is the maximum achievable loaded Q for energy-recovering cavities?

- Microphonics control
- Lorentz force detuning

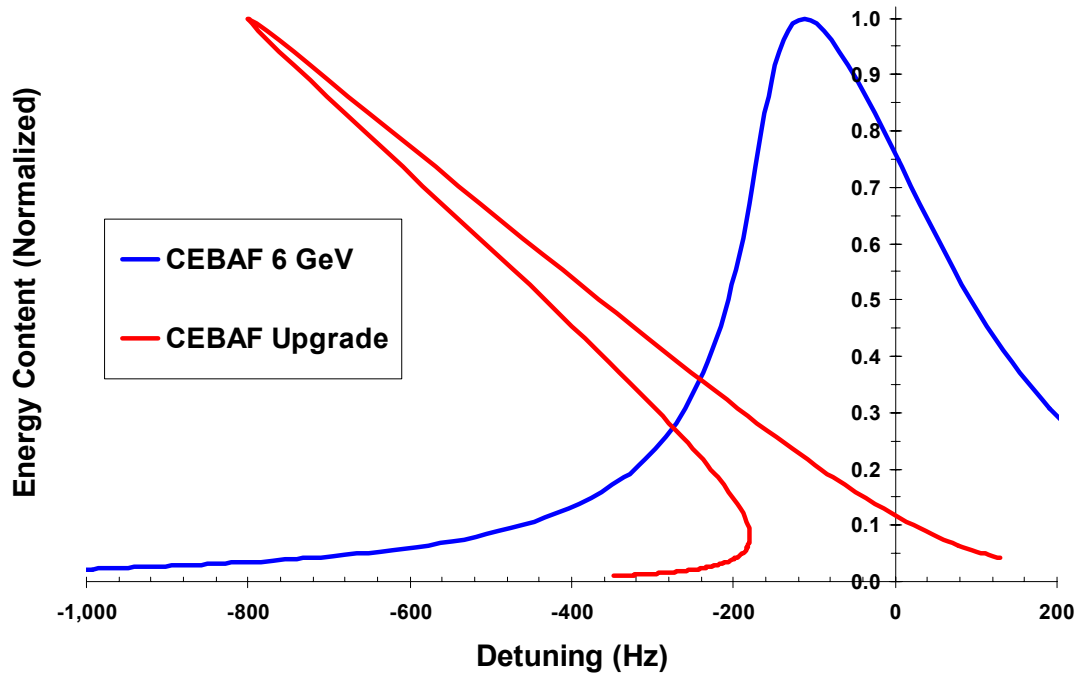

- Non-ideal energy recovery

Self-Excited Loop-Principle of Stabilization

Controlling the external phase shift θ_l can compensate for the fluctuations in the cavity frequency ω_c so the loop is phase locked to an external frequency reference ω_r.

$$\omega = \omega_c + \frac{\omega_c}{2Q} \tan \theta_l$$

Instead of introducing an additional external controllable phase shifter, this is usually done by adding a signal in quadrature

⇒ The cavity field amplitude is unaffected by the phase stabilization even in the absence of amplitude feedback.

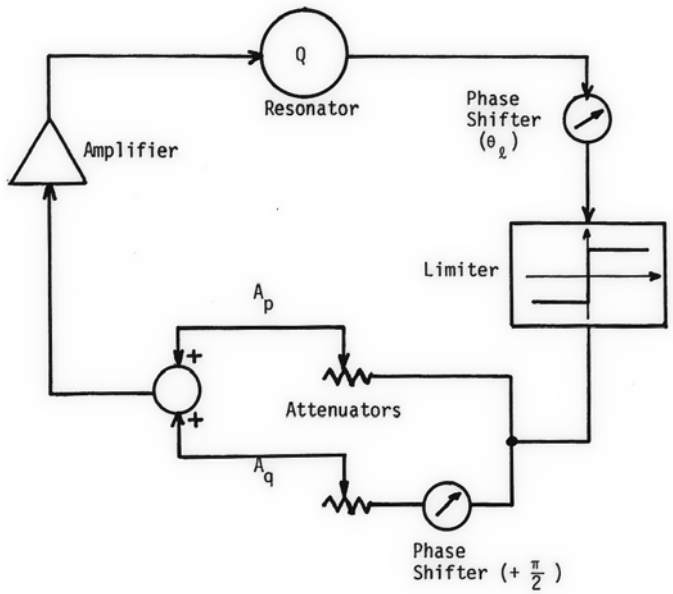

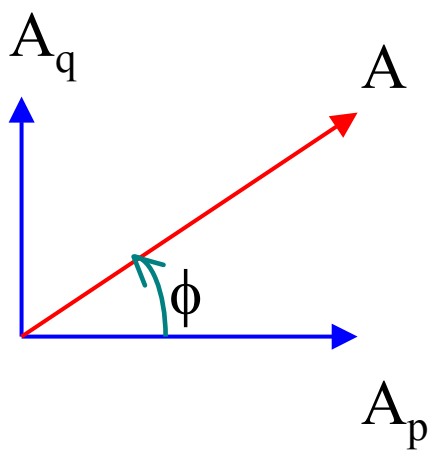

Self-Excited Loop – Block Diagram

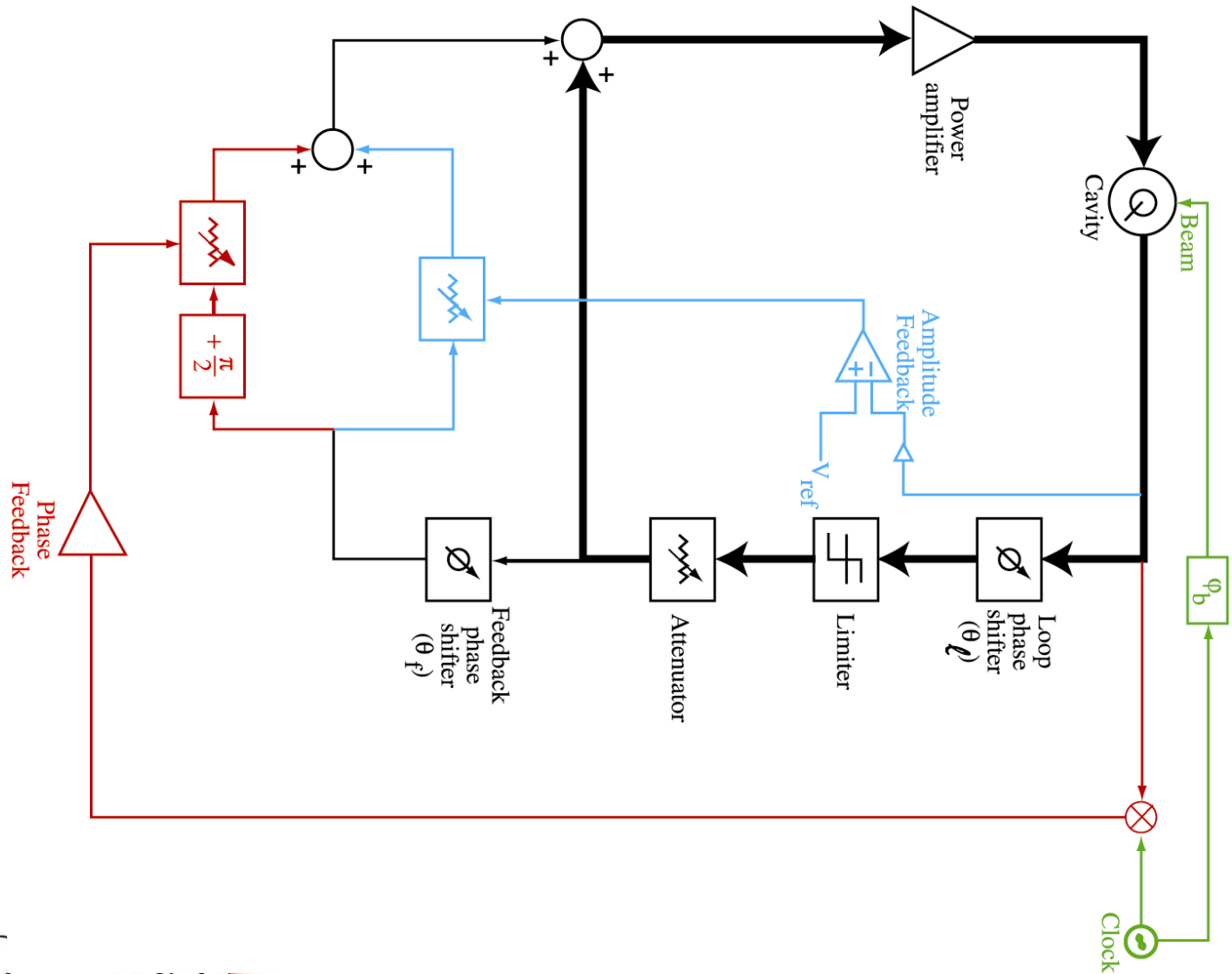

Non-Ideal Energy Recovery

- Ideal energy recovery assumes perfect cancellation of 2 large and opposite vectors
  - Accelerated and decelerated beams are equal in magnitude and 180^0 out of phase at the fundamental frequency
- In practice there will be a residual net current:
  - Phases may not differ by precisely 180°
  - Typical expected path length control adjustment leads to ~ 0.5^o deviation from 180°
  - Beam loss may occur, resulting in beam vectors of unequal magnitude
  - High-frequency beam current fluctuations

⇒ All of the above give rise to a net beam loading vector, of random amplitude and phase, but that will typically be reactive

⇒ Increase of rf power requirements and reduction of κ

Energy Recovery Phasor Diagram

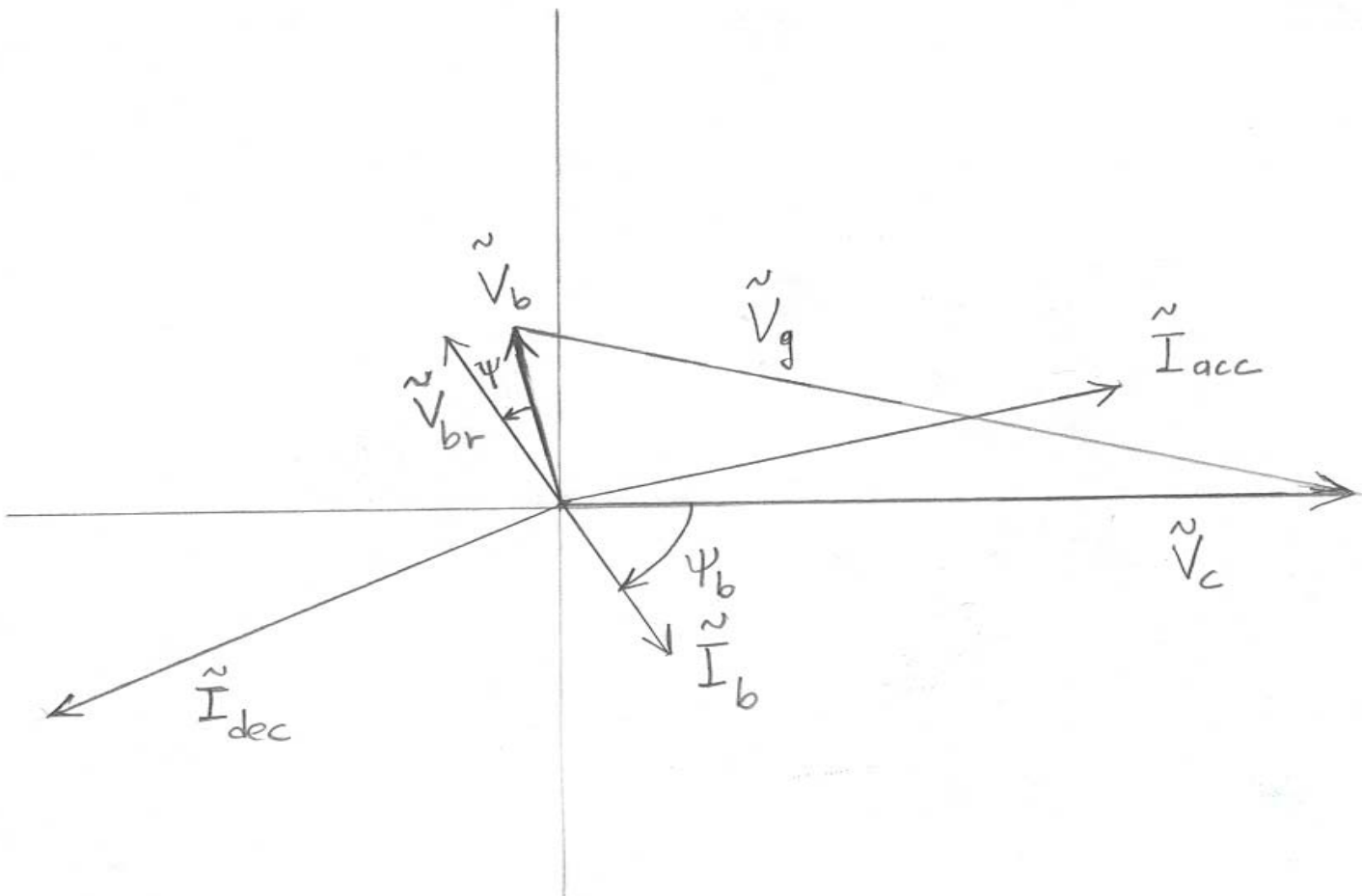

Sensitivity Analysis: Beam Loss

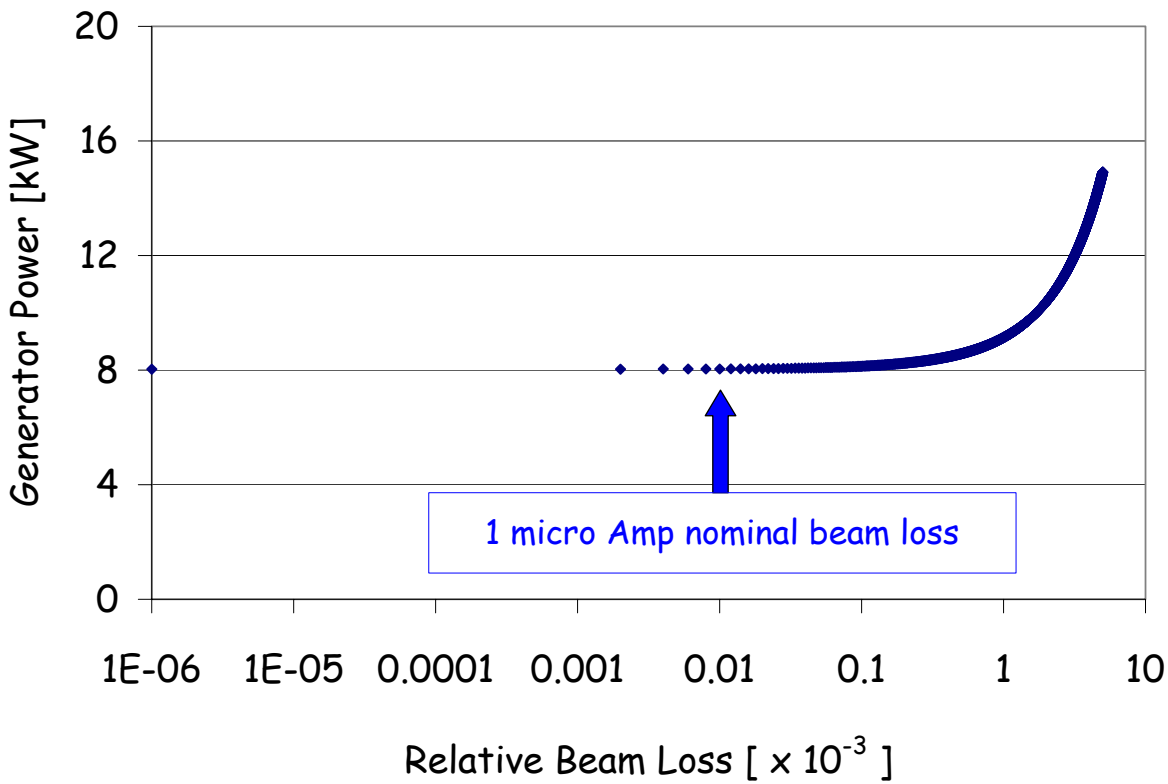

Sensitivity Analysis: Phase Errors

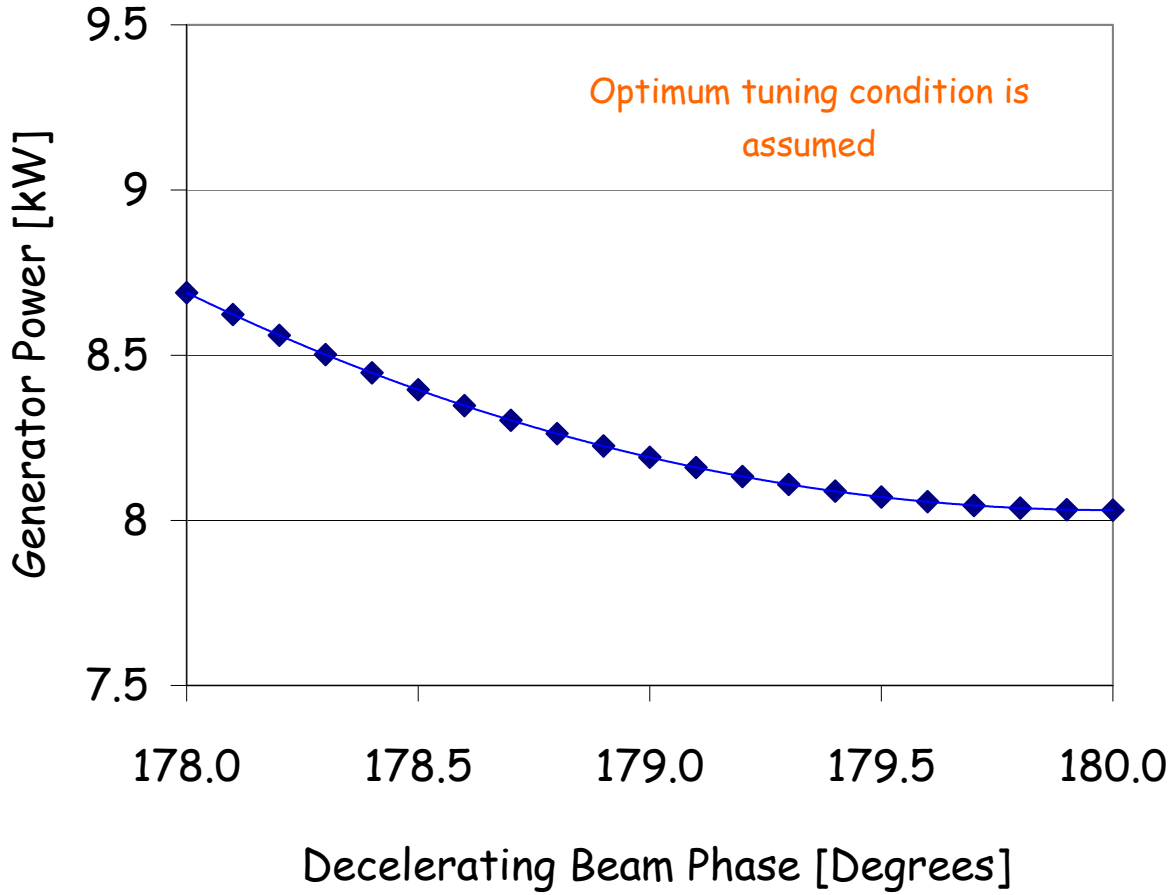

Amplitude and Phase Stability Requirements

- Specifications set by the users on energy spread and timing jitter will impose requirements on the phase and amplitude stability in the cavities
- These requirements will determine the characteristics of the LLRF control system, including gain and bandwidth of the feedback loops
- In ERLs, additional constraints on the LLRF system design may be imposed due to possible longitudinal instabilities

RF Instabilities

- Instabilities can arise from fluctuations of cavity fields.
- Two effects may trigger unstable behavior:
  - Beam loss which may originate from energy offset which shifts the beam centroid and leads to scraping on apertures.
  - Phase shift which may originate from energy offset coupled to M_{56} in the arc
- Instabilities predicted and observed at LANL, a potential limitation on high power recirculating, energy recovering linacs.

M_{56} is the momentum compaction factor and is defined by:

$$\Delta l = M_{56} \frac{\Delta E}{E}$$

RF Stability Flow Chart

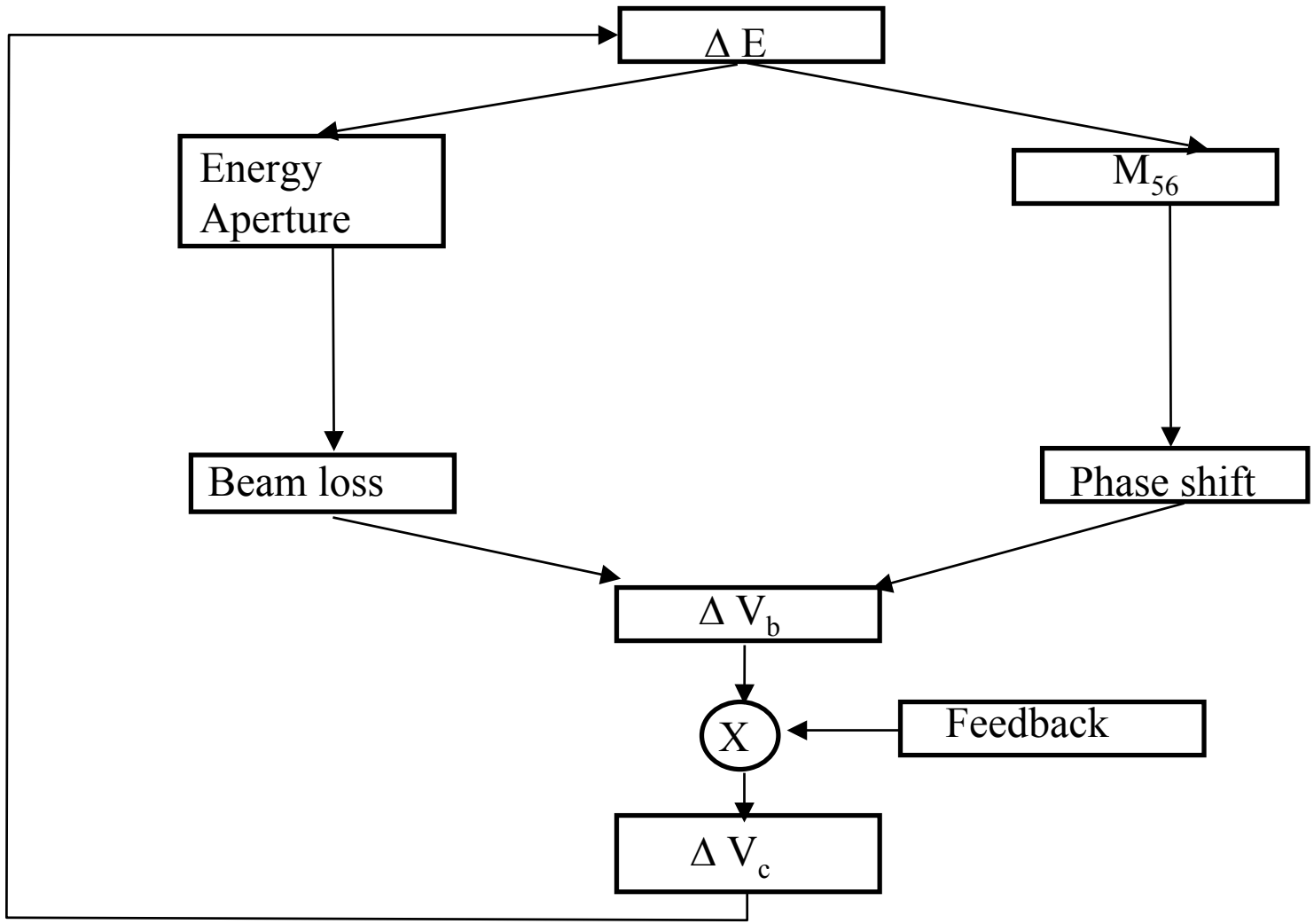

RF Stability Studies

- Model has been developed (Lia Merminga) in support of the Jlab FEL program. It includes:
  - beam-cavity interaction,
  - low level rf feedback
  - FEL interaction

- Solved analytically and numerically

- Model predicts instabilities that agree with experimental measurements performed on JLab IRFEL
  - Agreement is quantitative with FEL off
  - Agreement is qualitative with FEL on

- Instabilities can be controlled by LLRF feedback
  - Further analysis and modeling is needed to understand the rf stability issues of ERLs with much higher current (Control of random reactive loading currents in superconducting cavities)

Higher Order Modes

- Even in the case of perfect energy recovery cancellation of accelerated and decelerated beam occurs only at the fundamental mode frequency
- Coupling to other monopole modes
  - HOM power dissipation
- Coupling to dipole modes
  - Beam breakup instabilities

HOM Power Dissipation

- Accelerated and decelerated beams will couple to the (non fundamental) monopole modes and will deposit energy in those modes

- Power dissipated depends on product of bunch charge and average current

$$P_{diss} = 2k\,Q\langle I\rangle$$

- For typical TESLA-type cavities $k \sim 8.5$ V/pC for $\sigma_z \sim 1$ mm

  $\langle I\rangle \sim 250$ mA, $Q \sim 2$ nC

  $P_{diss} \sim 8$ kW/cavity

- Need a better understanding of where that power goes

  Only a small fraction ends up on the cavity walls

- Need engineering development of HOM absorbers

Beam Breakup Instabilities

- Coupling of accelerated and decelerated beams to dipole modes
- Single bunch, single pass effects: limit the bunch charge
  - Energy spread induced by variation of longitudinal wake field across bunch
  - Emittance growth induced by single-bunch transverse BBU

(Multi-Bunch) Beam Breakup Instabilities

- Multi-pass, multi-bunch effects: limit the average current
- Recirculating beam through a cavity can lead to transverse instabilities
  - Transverse displacement on successive recirculations can excite HOMs that further deflect initial beam
  - Feedback loop between beam and cavities
  - Threshold current above which the system becomes unstable
  - Because of their high Q, superconducting systems can be more sensitive to this type of instability
- TDBBU: 2d beam breakup code used for simulation (Krafft, Bisognano, Yunn)
  - Being benchmarked at the JLab FEL
  - Predicts threshold current of ~ 250 mA, and rise time of ~ 2 msec.

Conclusions

- Energy recovery superconducting linacs are very efficient devices for certain applications
  - They can approach the efficiency of storage rings while preserving the beam properties of linacs
- Concept has been fully demonstrated and is used routinely in a user facility
- Studies have uncovered no fundamental show stoppers
- The ultimate limits of the energy-recovering concept have not been fully determined
  - Highest Q_l for the cavities while maintaining phase and amplitude stability requirements
  - Highest current that can be accelerated/decelerated
    - Preservation of rf stability
    - Avoidance BBU instabilities
    - Extraction of HOM power
    - Control of beam loss