Physics 417/517 Introduction to Particle Accelerator Physics

G. A. Krafft
Jefferson Lab
Jefferson Lab Professor of Physics
Old Dominion University

Methods of Acceleration

- Acceleration by Static Electric Fields (DC) Acceleration
  - Cockcroft-Walton
  - van de Graaf Accelerators
  - Limited by voltage breakdowns to potentials of under a million volts in 1930, and presently to potentials of tens of millions of volts (in modern van de Graaf accelerators). Not enough to do nuclear physics at the time.
- Radio Frequency (RF) Acceleration
  - Main means to accelerate in most present day accelerators because one can get to 10-100 MV in a meter these days. Reason: alternating fields don't cause breakdown (if you are careful!) until much higher field levels than DC.
  - Ideas started with Ising and Wideröe

Cockcroft-Walton

Proton Source at Fermilab, Beam Energy 750 keV

van de Graaf Accelerator

Generator

Brookhaven
Tandem
van de Graaf
~ 15 MV

Tandem trick multiplies
the output energy

Ising's Linac Idea

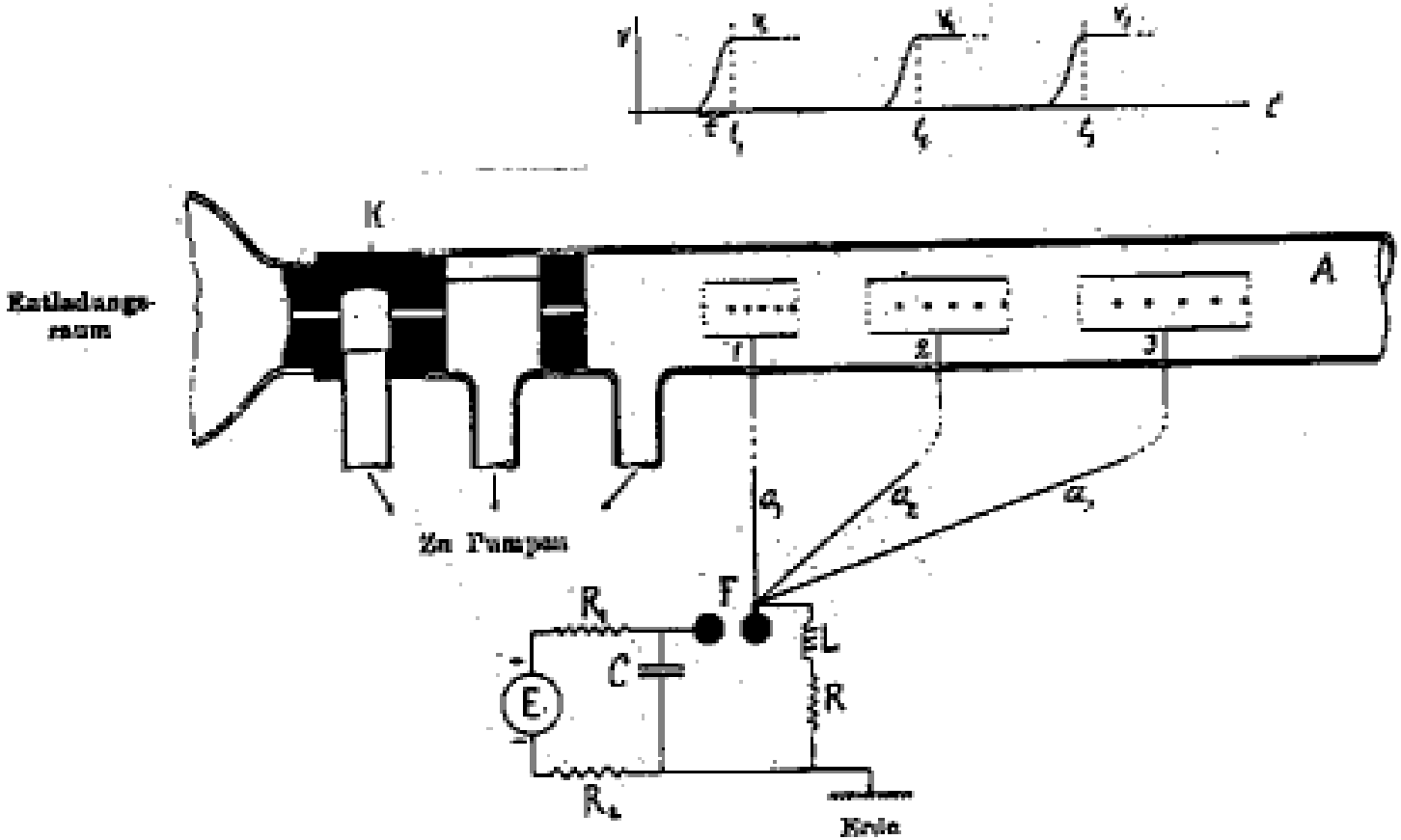

Prinzip einer Methode zur Herstellung von Kanalstrahlen hoher Voltzahl' (in German), Arkiv för matematik o. fysik, 18, Nr. 30, 1-4 (1924).

Drift Tube Linac Proposal

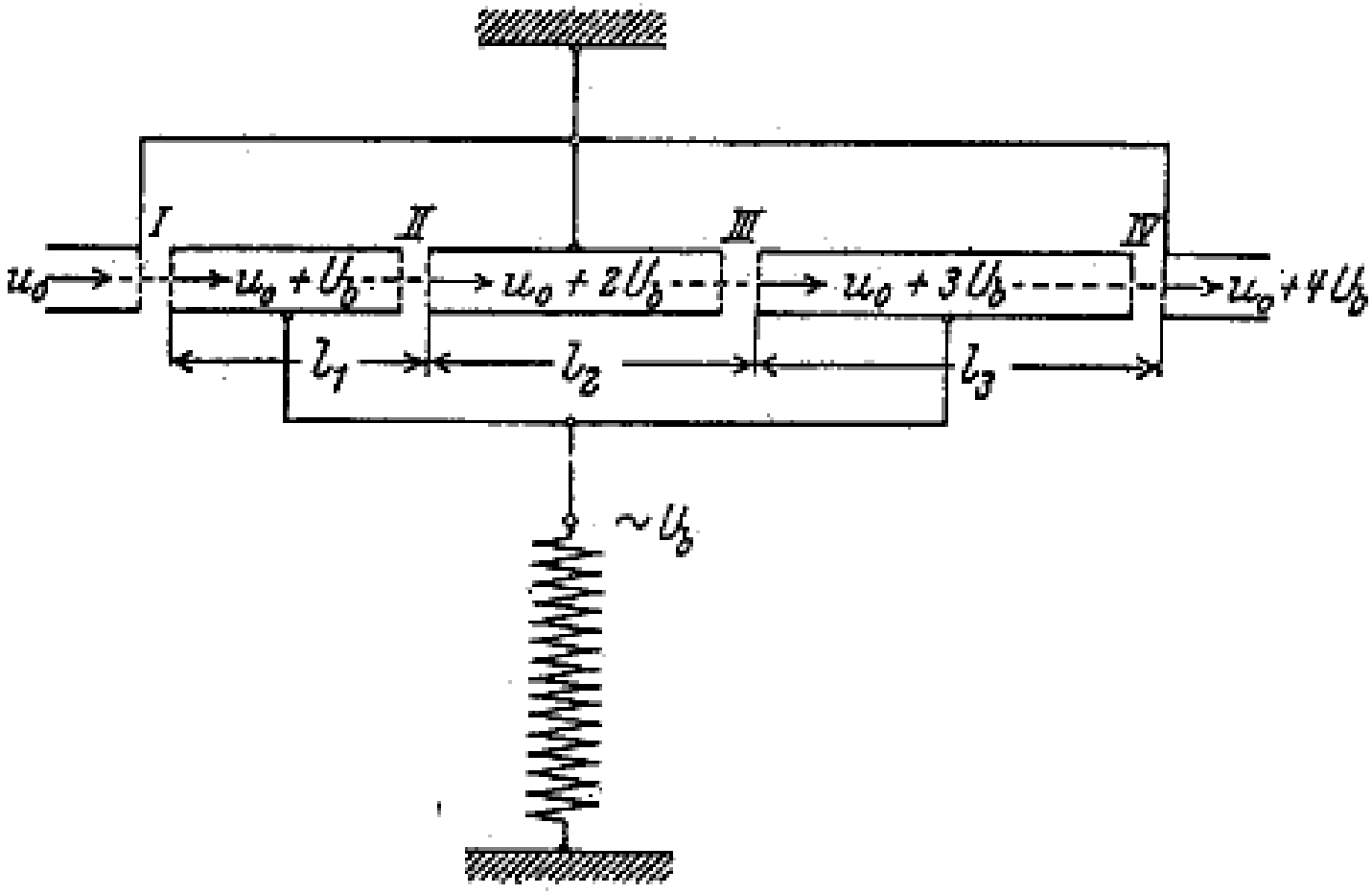

Idea Shown in Wideröe Thesis

Wideröe Thesis Experiment

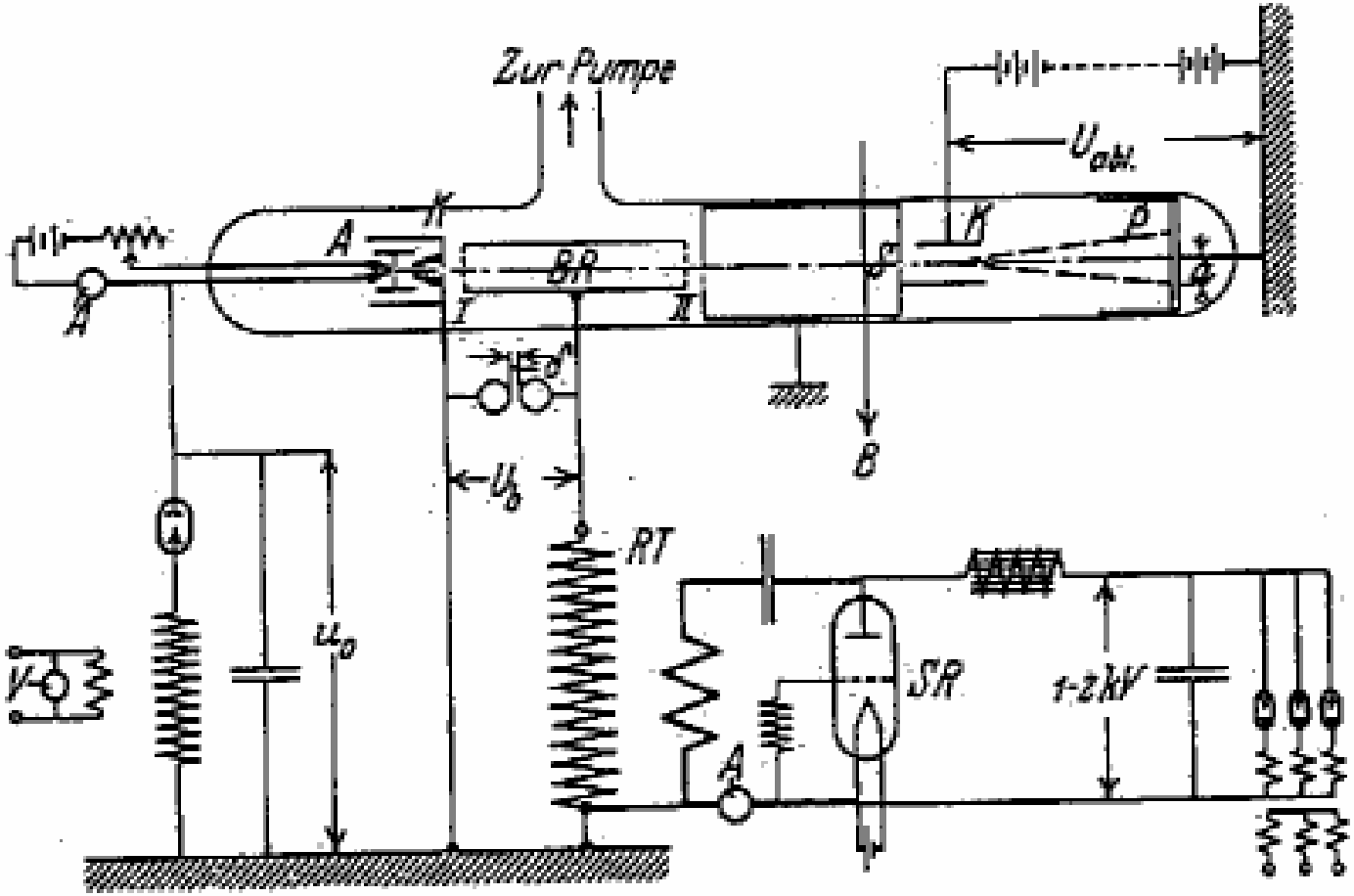

Über ein neues Prinzip zur Herstellung hoher Spannungen, *Archiv für Elektrotechnik* **21**, 387 (1928)

(On a new principle for the production of higher voltages)

Sloan-Lawrence Heavy Ion Linac

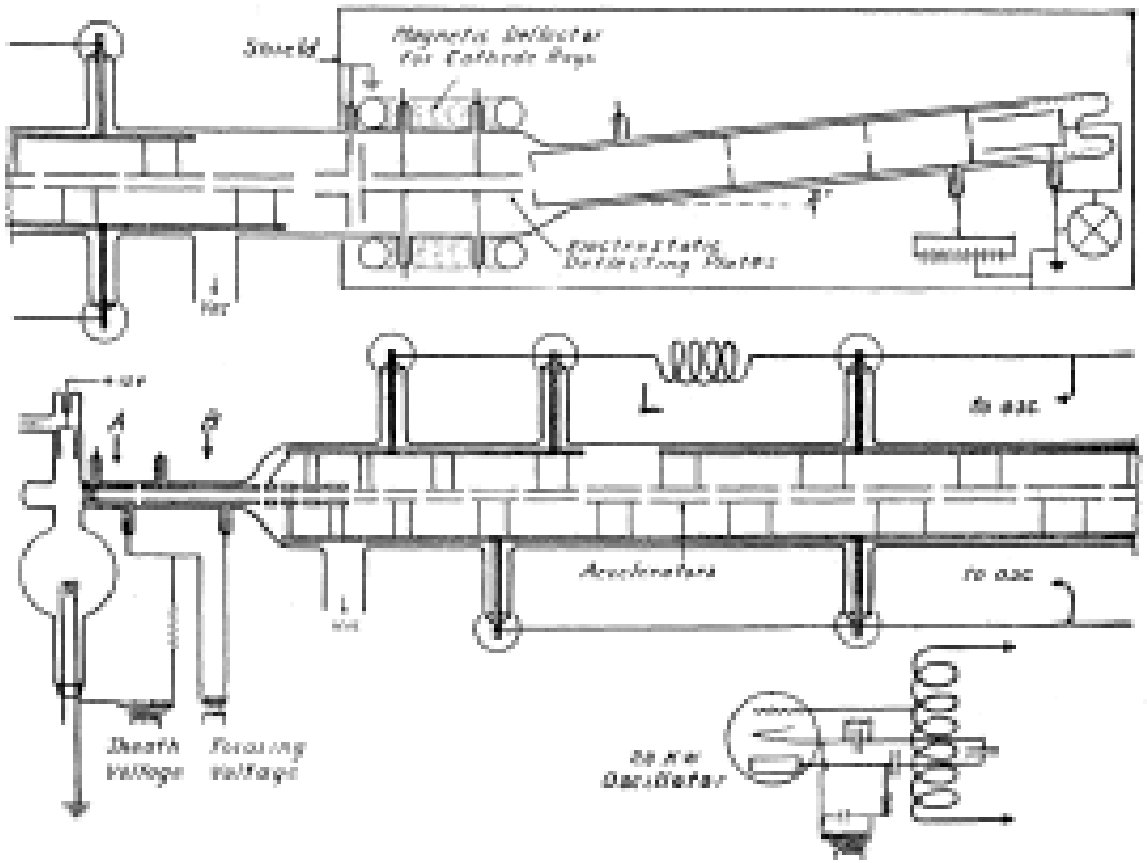

Fig. 1. Diagram of apparatus.

The Production of Heavy High Speed Ions without the Use of High Voltages
David H. Sloan and Ernest O. Lawrence Phys. Rev. **38**, 2021 (1931)

Alvarez Drift Tube Linac

- The first large proton drift tube linac built by Luis Alvarez and Panofsky after WW II

. (1945-1955) Alvarez Proton Linac

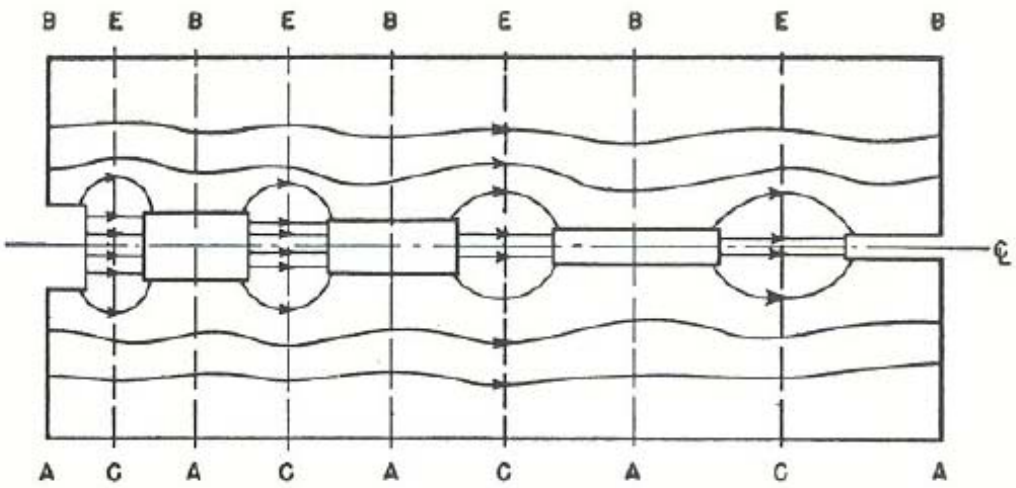

FIG. 2. Linear accelerator produced by introducing drift tubes into cavity excited as in Fig. 1. Division into unit cells.

Alvarez, Bradner, Frank, Gordon, Gow, Marshal, F. Oppenheimer, Panofsky, Richman, and Woodyard, Rev. Sci. Instrum., **26**, 111-133, (1955)

Earnest Orlando Lawrence

Germ of Idea*

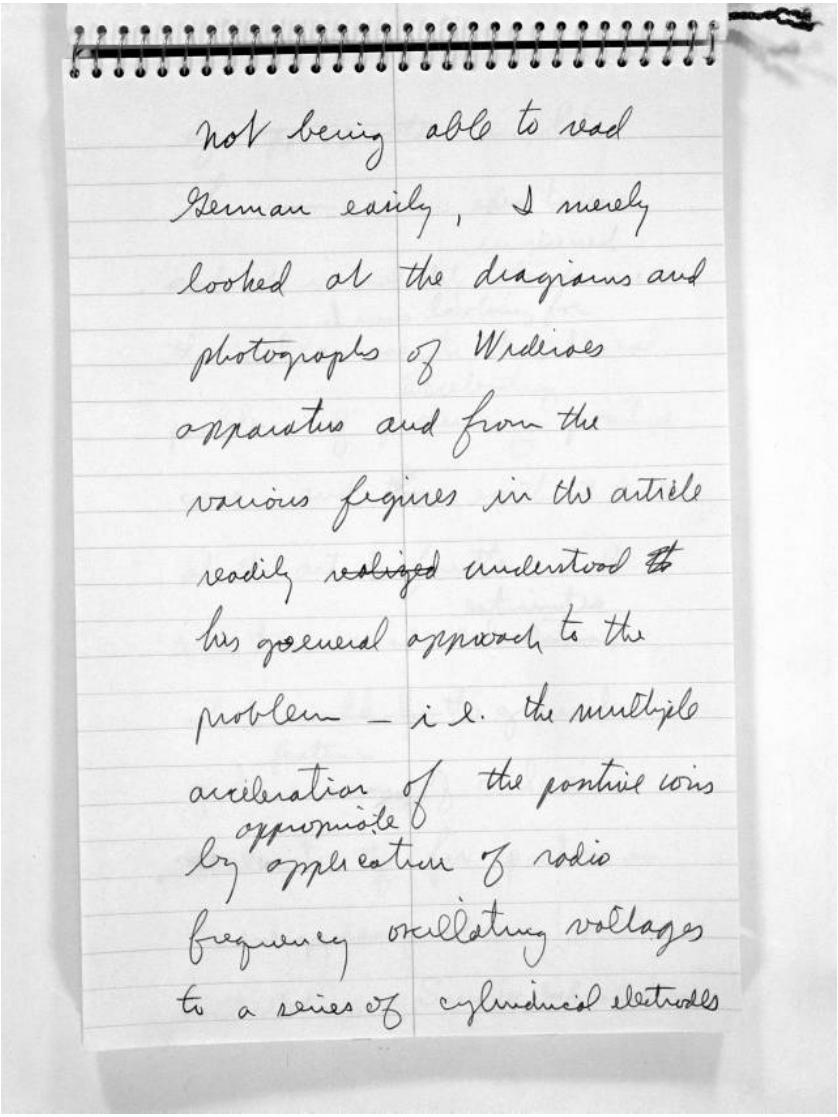

not being able to read
German easily, I merely
looked at the diagrams and
photographs of Wideroes
apparatus and from the
various figures in the article
readily ~~realized~~ understood ~~the~~
his general approach to the
problem – i.e. the multiple
acceleration of the positive ions
by application of radio
frequency oscillating voltages
to a series of cylindrical electrodes

*Stated in
E. O. Lawrence
Nobel Lecture

Lawrence's Question

- Can you re-use "the same" accelerating gap many times?

$$\vec{F} = m\vec{a} = q\vec{\mathrm{v}} \times \vec{B}$$

$\vec{\mathrm{B}} \otimes$

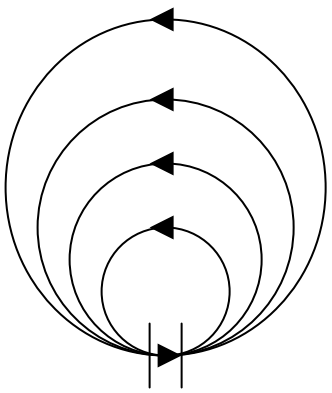

gap

$$\frac{d^2x}{dt^2} = \frac{qB}{m}\mathrm{v}_y \quad \rightarrow \frac{d^2\mathrm{v}_x}{dt^2} + \Omega_c^2 \mathrm{v}_x = 0$$

$$\frac{d^2y}{dt^2} = -\frac{qB}{m}\mathrm{v}_x \rightarrow \frac{d^2\mathrm{v}_y}{dt^2} + \Omega_c^2 \mathrm{v}_y = 0$$

$$\frac{d}{dt}\left(\mathrm{v}_x^2 + \mathrm{v}_y^2\right) = \frac{qB}{m}\left(\mathrm{v}_x\mathrm{v}_y - \mathrm{v}_y\mathrm{v}_x\right) = 0$$

$\mathrm{v}_0 = \sqrt{\mathrm{v}_x^2(t) + \mathrm{v}_y^2(t)}$ is a constant of the motion

Cyclotron Frequency

$$v_x(t) = v_0 \cos(\Omega_c t + \delta); v_y(t) = -v_0 \sin(\Omega_c t + \delta)$$

$$x(t) = x_0 + \frac{v_0}{\Omega_c} \sin(\Omega_c t + \delta); y(t) = y_0 + \frac{v_0}{\Omega_c} \cos(\Omega_c t + \delta)$$

The radius of the oscillation $r = v_0/\Omega_c$ is proportional to the velocity after the gap. Therefore, the particle takes the same amount of time to come around to the gap, independent of the actual particle energy!!!! (only in the non-relativistic approximation). Establish a resonance (equality!) between RF frequency and particle transverse oscillation frequency, also known as the Cyclotron Frequency

$$f_{rf} = f_c = \Omega_c / 2\pi = \frac{eB}{2\pi m}$$

What Correspond to Drift Tubes?

- Dee's!

U. S. Patent Diagram

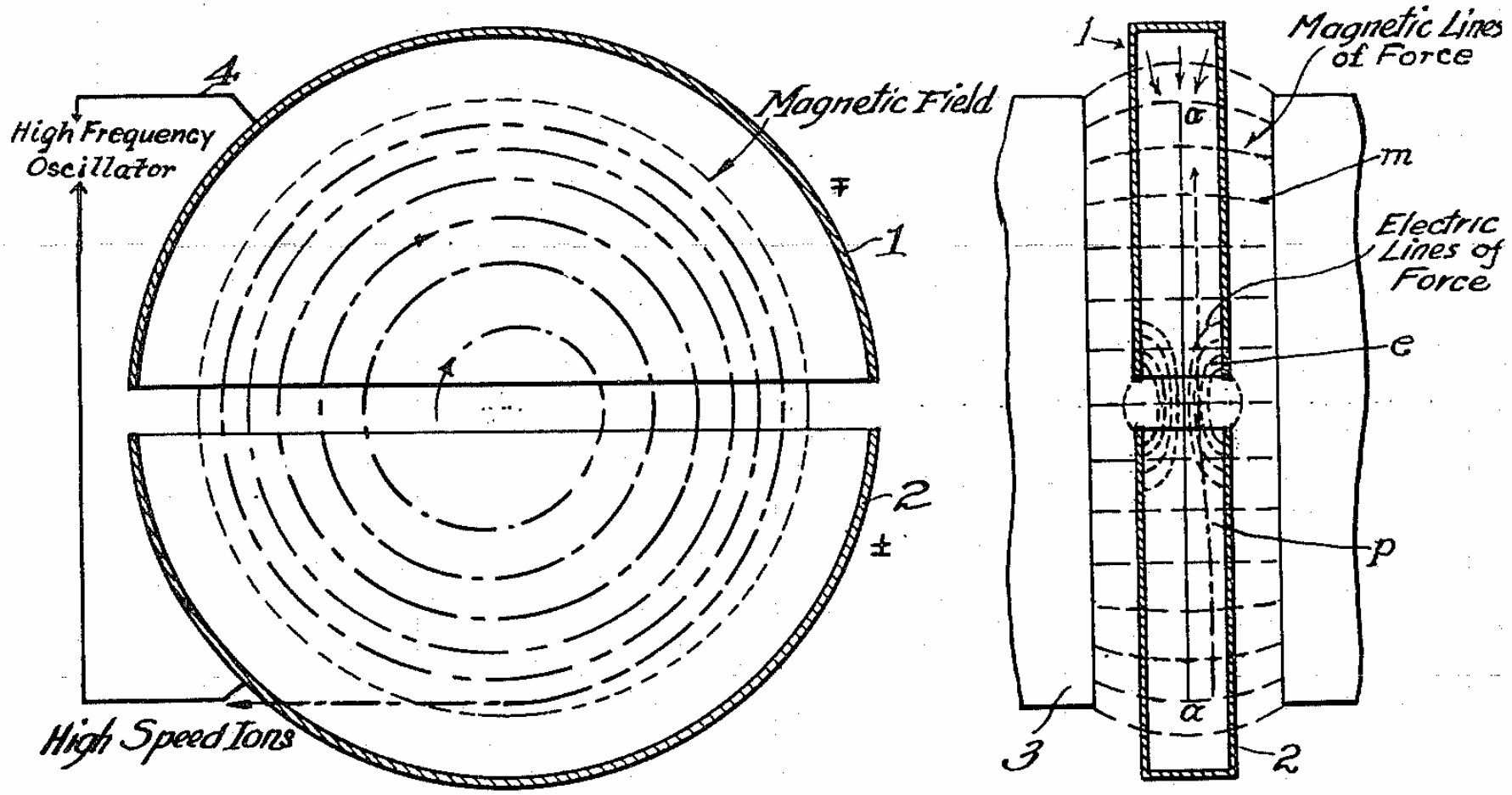

Magnet for 27 Inch Cyclotron (LHS)

Lawrence and "His Boys"

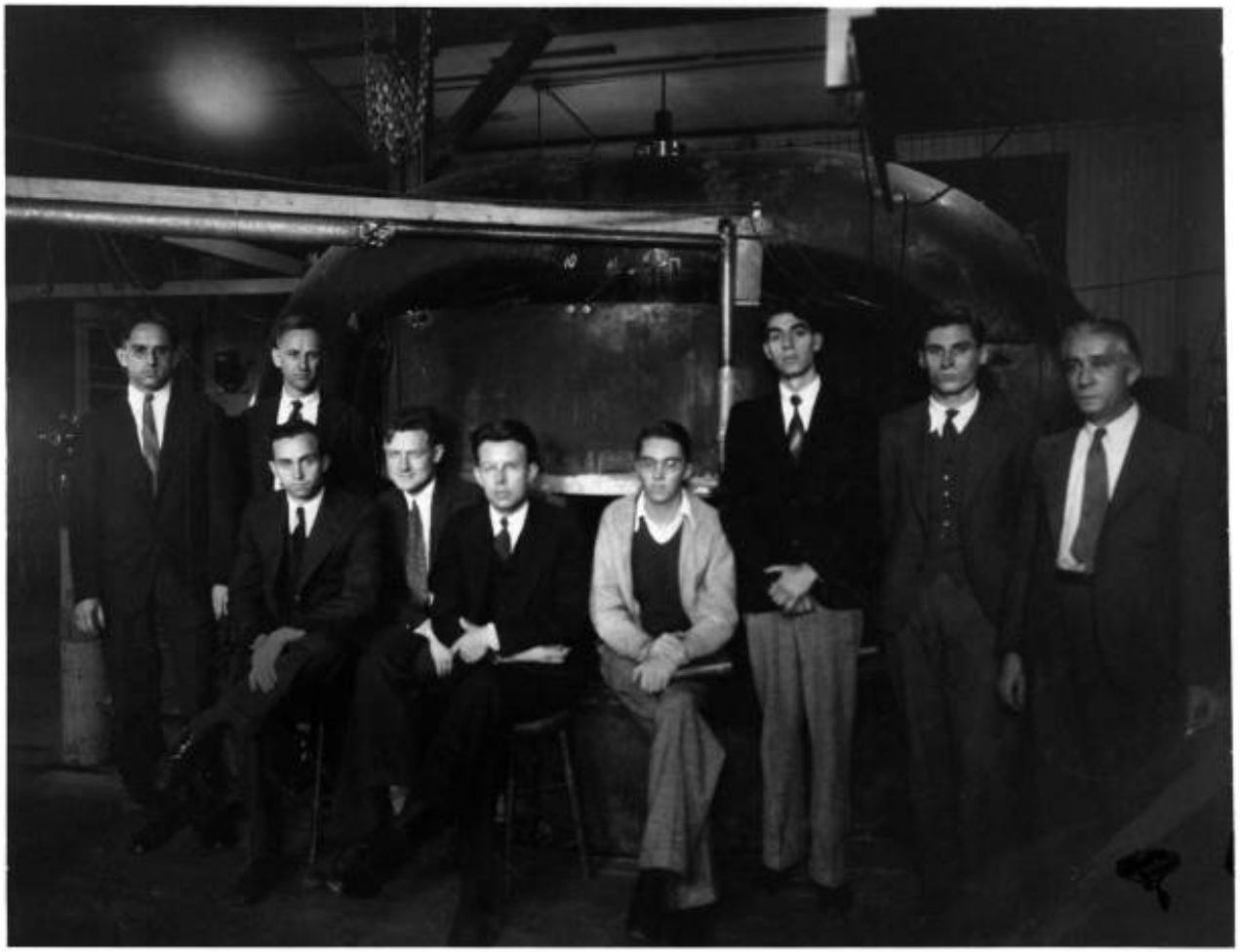

1-4: Jack Livingood, Frank Exner, M.S.Livingston, David Sloan, E.O.Lawrence, Milton White, Wesley Coates, L.Jackson Laslett and Commander T. Lucci - 1933

And Then!

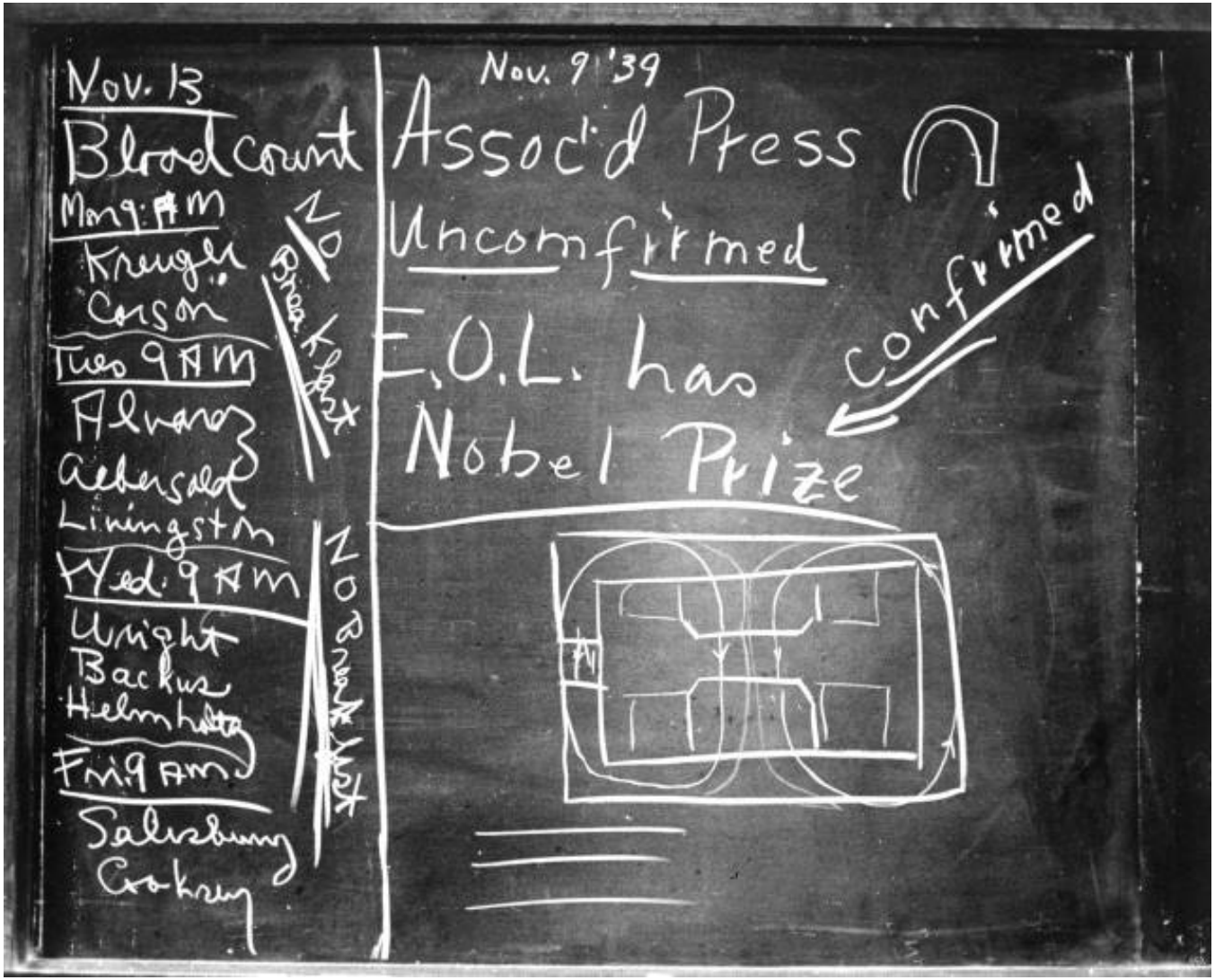
Nov. 13
Broadcount
Mon 9 AM
Kruger
Corson
Tues 9 AM
Alvarez
Oebersold
Livingston
Wed. 9 AM
Wright
Backus
Helmholtz
Fri 9 AM
Salisbury
Cockroft
No Breakfast
No Breakfast
Nov. 9 '39
Associ'd Press
Uncomfirmed
E.O.L. has
Nobel Prize
confirmed

Beam Extracted from a Cyclotron

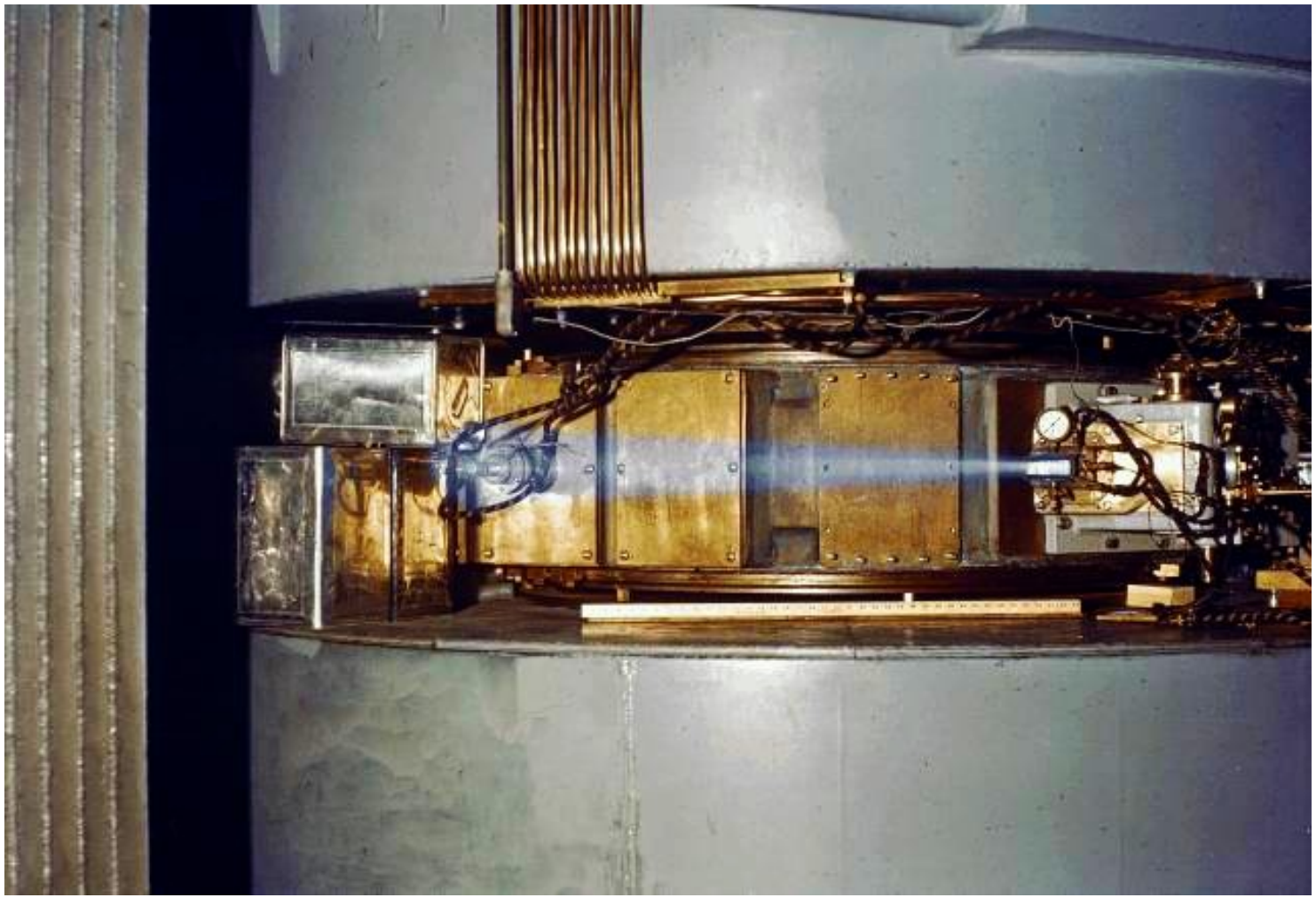

Radiation Laboratory 60 Inch Cyclotron, circa 1939

88 Inch Cyclotron at Berkeley Lab

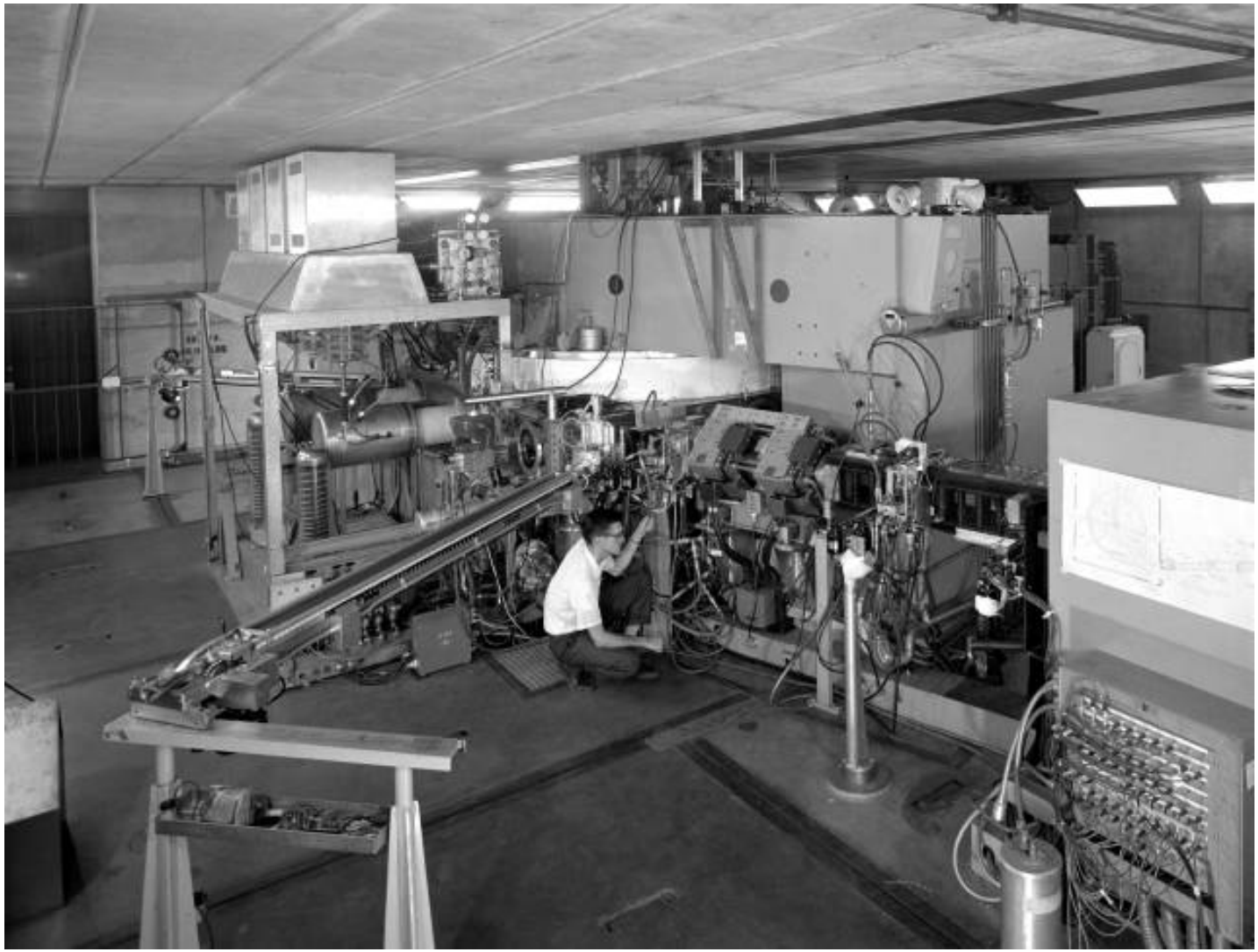

Relativistic Corrections

When include relativistic effects (you'll see in the HW!) the "effective" mass to compute the oscillation frequency is the relativistic mass γm

$$f_c = \Omega_c / 2\pi = \frac{eB}{2\pi\gamma m}$$

where γ is Einstein's relativistic γ, most usefully expressed as

$$\gamma = \frac{E_{tot}}{E_0} = \frac{E_0 + E_{kin}}{E_0} = \frac{mc^2 + E_{kin}}{mc^2}$$

m particle rest mass, E_{kin} particle kinetic energy

Cyclotrons for Radiation Therapy

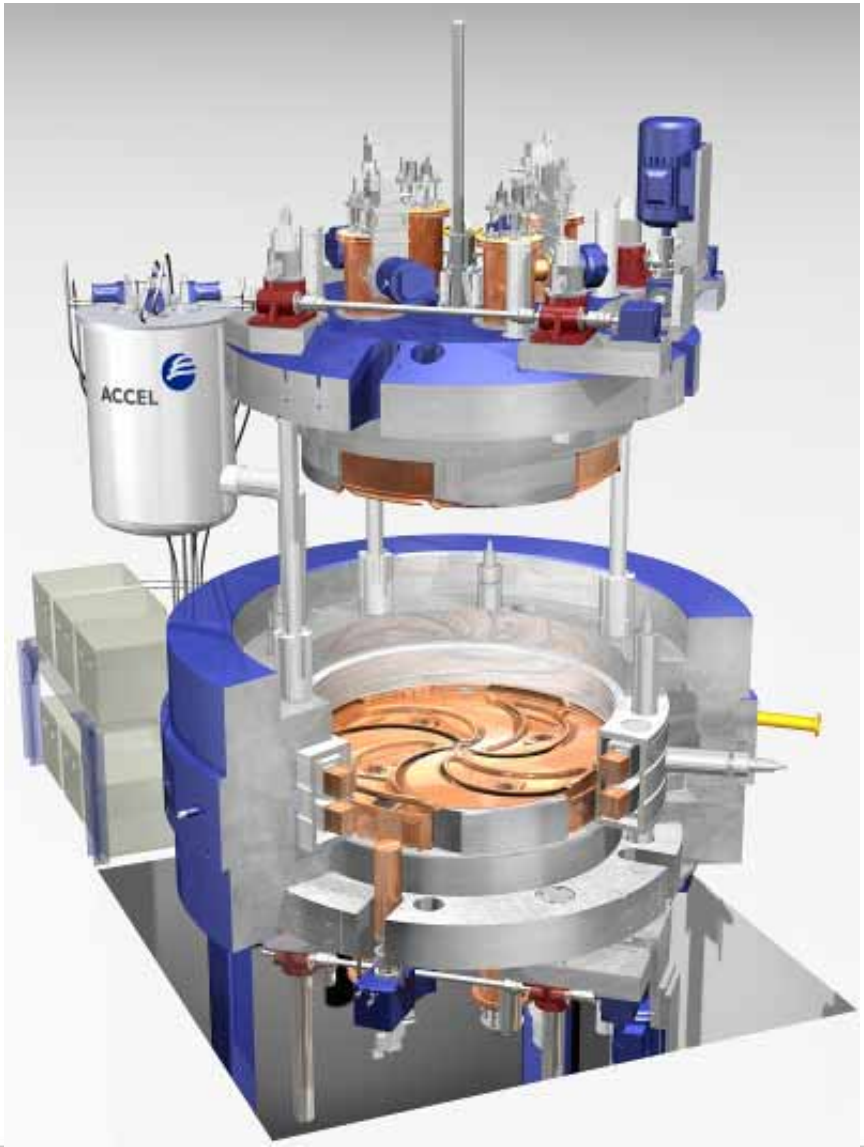

Bragg Peak

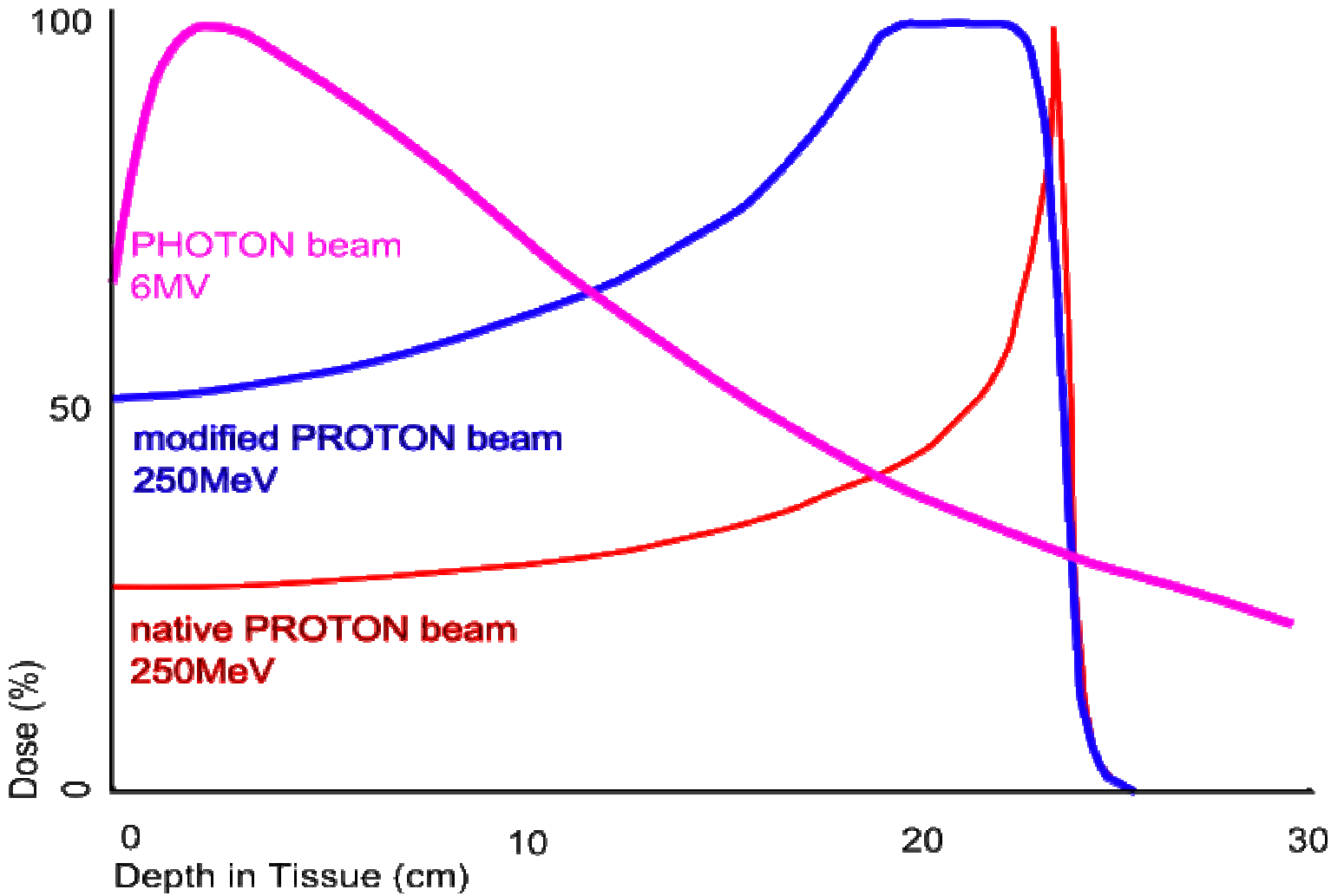
100
50
0
Dose (%)
PHOTON beam
6MV
modified PROTON beam
250MeV
native PROTON beam
250MeV
0
10
20
30
Depth in Tissue (cm)

Betatrons

25 MeV electron accelerator with its inventor: Don Kerst. The earliest electron accelerators for medical uses were betatrons.

300 MeV ~ 1949

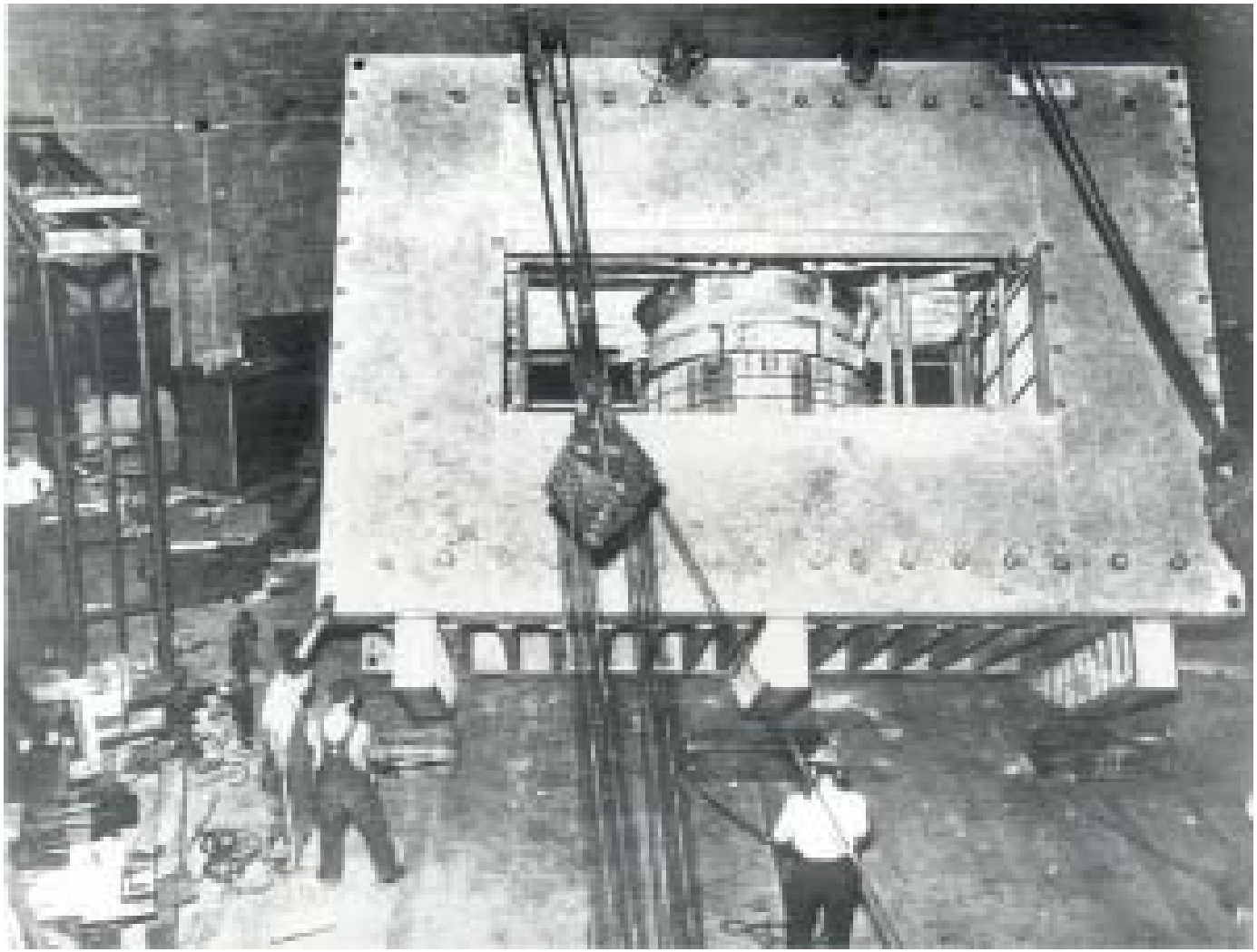

Electromagnetic Induction

Faraday's Law: Differential Form of Maxwell Equation

$$\vec{\nabla} \times \vec{E} = -\frac{\partial \vec{B}}{\partial t}$$

Faraday's Law: Integral Form

$$\oint_S \vec{\nabla} \times \vec{E} \cdot d\vec{S} = -\oint_S \frac{\partial \vec{B}}{\partial t} \cdot d\vec{S}$$

Faraday's Law of Induction

$$\oint_{\partial S} \vec{E} \cdot d\vec{l} = 2\pi R E_\theta = -\frac{d}{dt}\Phi_B$$

Transformer

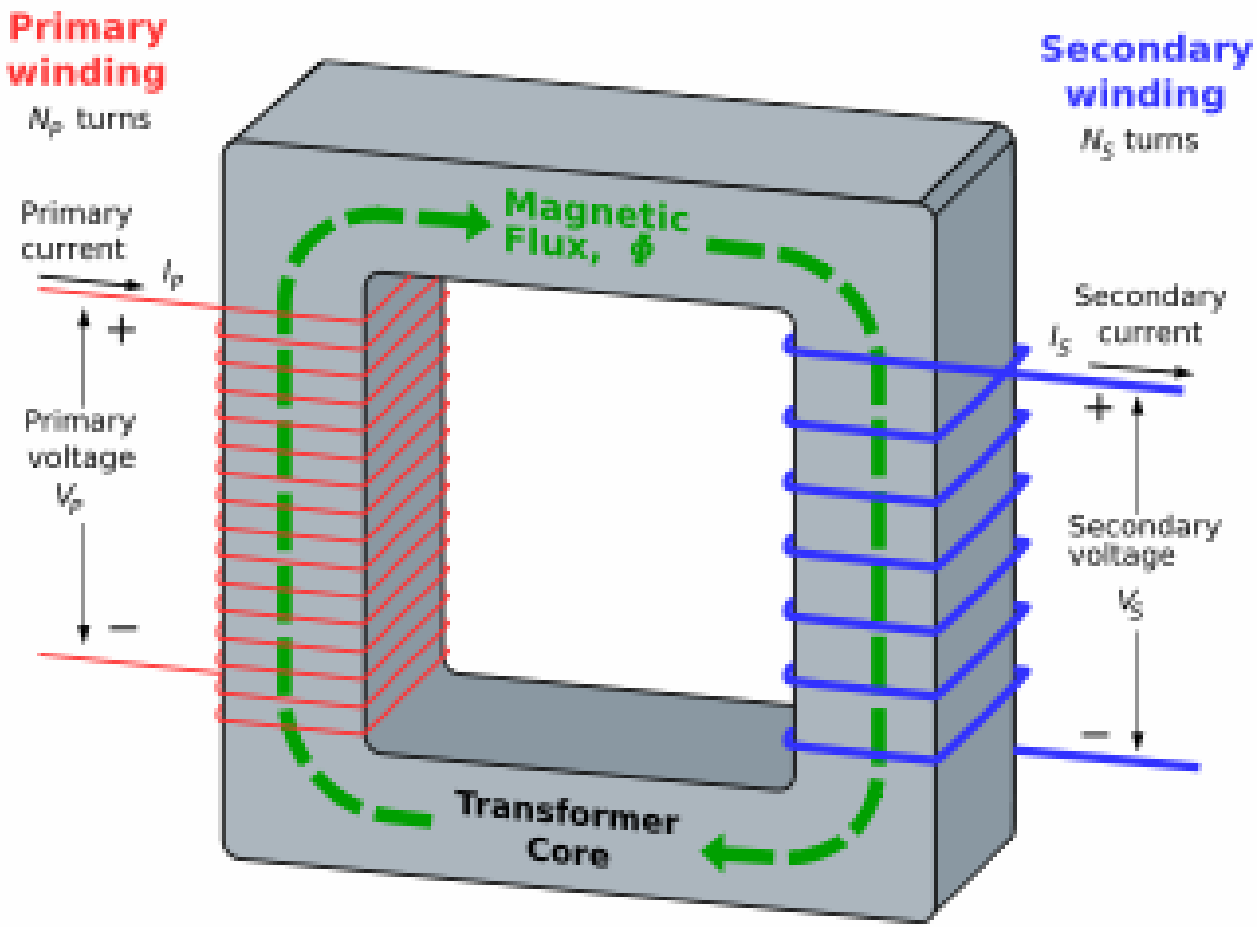

Betatron as a Transformer

- In the betatron the electron beam itself is the secondary winding of the transformer. Energy transferred directly to the electrons

$$2\pi R E_\theta = -\frac{d}{dt}\Phi_B$$

- Radial Equilibrium

$$R = \frac{\beta c}{eB/\gamma m}$$

- Energy Gain Equation

$$\frac{d\gamma}{dt} = \frac{eE_\theta \beta c}{mc^2}$$

Betatron condition

To get radial stability in the electron beam orbit (i.e., the orbit radius does not change during acceleration), need

$$R = const \Rightarrow \frac{dB}{dt} = \frac{B}{\gamma}\frac{d\gamma}{dt} \text{ and } \frac{B}{\gamma} \approx \frac{cm}{eR}$$

$$\Phi_B = \alpha \pi R^2 B \text{ for some } \alpha \text{ and } \frac{d\gamma}{dt} \approx \frac{ec}{mc^2}\frac{1}{2\pi R}\frac{d\Phi_B}{dt} \Rightarrow \alpha = 2$$

$$\therefore \Phi_B = 2\pi R^2 B\left(r = R\right)$$

This last expression is sometimes called the "betatron two for one" condition. The energy increase from the flux change is

$$\gamma - \gamma_0 \approx \frac{q\beta c}{2\pi R mc^2}\Delta\Phi_B$$

Transverse Beam Stability

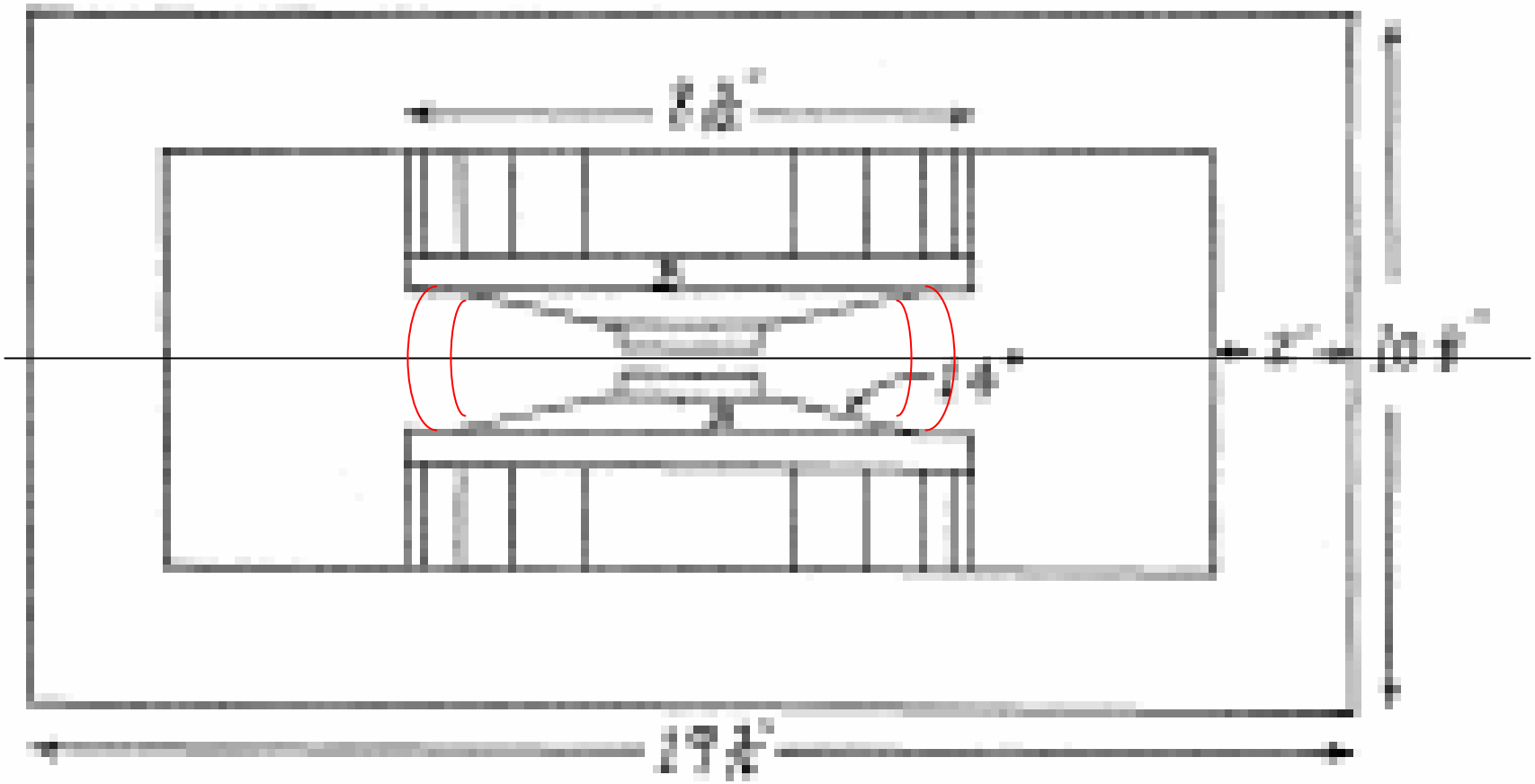

Ensured by proper shaping of the magnetic field in the betatron

Relativistic Equations of Motion

Standard Cylindrical Coordinates

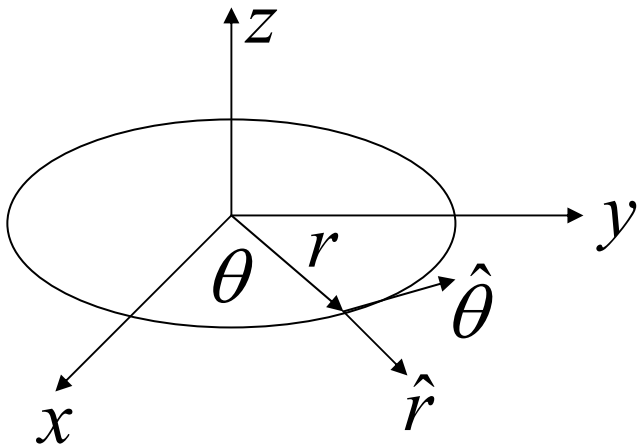

$$\frac{d\vec{\mathrm{v}}}{dt} = \frac{q}{\gamma m}\left(\vec{\mathrm{v}} \times \vec{B}\right) \qquad \frac{d\gamma}{dt} = 0!!$$

$$r^2 = x^2 + y^2$$

$$x = r\cos\theta \qquad y = r\sin\theta$$

$$\hat{r} = \cos\theta\hat{x} + \sin\theta\hat{y} \qquad \hat{\theta} = -\sin\theta\hat{x} + \cos\theta\hat{y}$$

$$\mathrm{v}_r = \vec{\mathrm{v}} \cdot \hat{r} = \dot{r} \qquad \mathrm{v}_\theta = \vec{\mathrm{v}} \cdot \hat{\theta} = r\dot{\theta}$$

$$\frac{d\vec{\mathrm{v}}}{dt} = \frac{d}{dt}\left(\mathrm{v}_r\hat{r} + \mathrm{v}_\theta\hat{\theta}\right)$$

$$d\hat{r}/dt = \dot{\theta}\hat{\theta}$$

$$d\hat{\theta}/dt = -\dot{\theta}\hat{r}$$

Cylindrical Equations of Motion

In components

$$\ddot{r} - r\dot{\theta}^2 = \frac{q}{\gamma m}\left(\vec{\mathrm{v}} \times \vec{B}\right)_r = \frac{q}{\gamma m} r\dot{\theta} B_z$$

$$r\ddot{\theta} + 2\dot{r}\dot{\theta} = \frac{q}{\gamma m}\left(\vec{\mathrm{v}} \times \vec{B}\right)_\theta = \frac{q}{\gamma m}\left(\dot{z}B_r - \dot{r}B_z\right)$$

$$\ddot{z} = \frac{q}{\gamma m}\left(\vec{\mathrm{v}} \times \vec{B}\right)_z = -\frac{q}{\gamma m} r\dot{\theta} B_r$$

Zero'th order solution

$$r(t) = cons = R$$

$$\theta(t) = \theta_0 + \dot{\theta}_0 t \qquad z(t) = 0$$