Old Dominion University October 2012

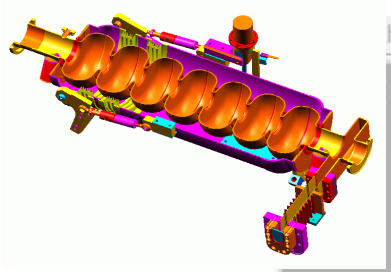

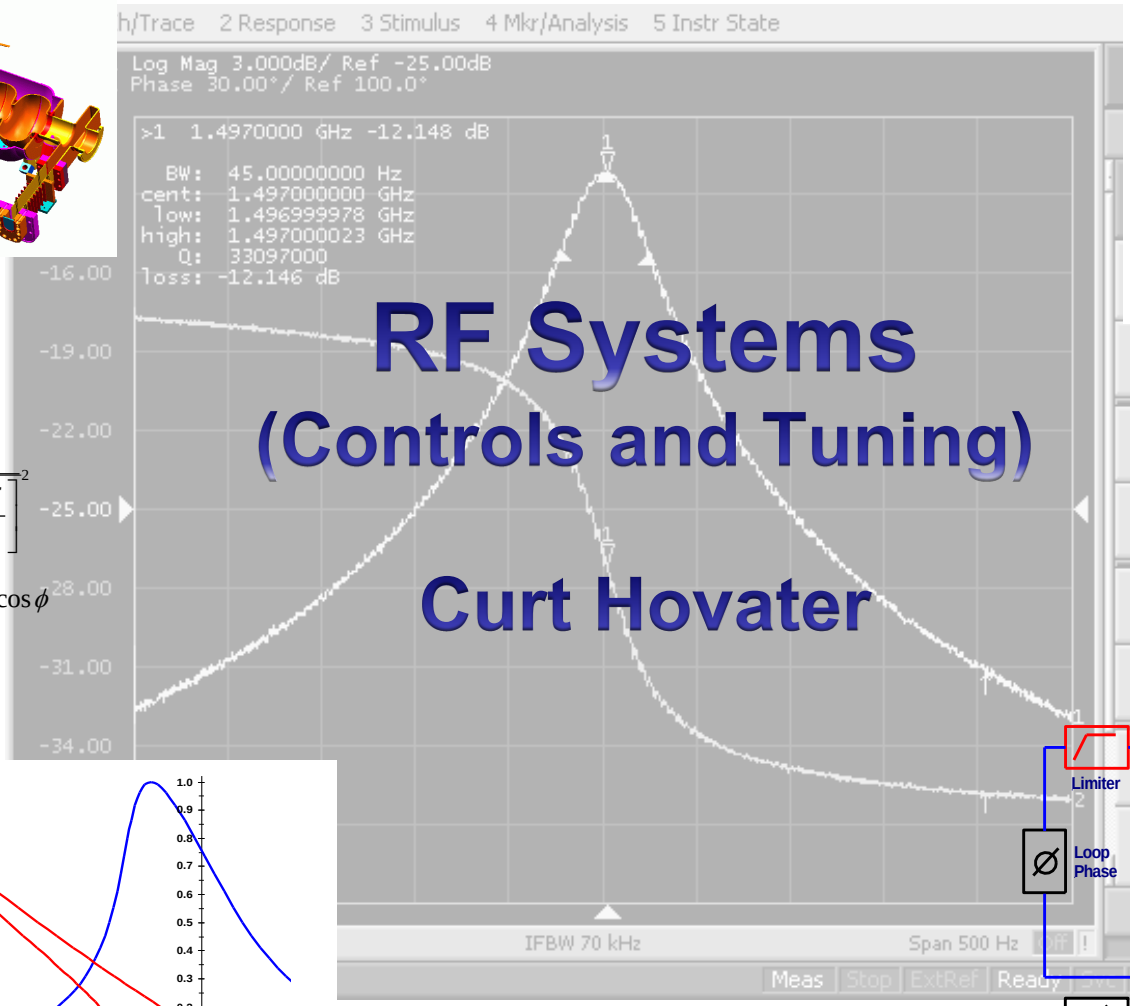

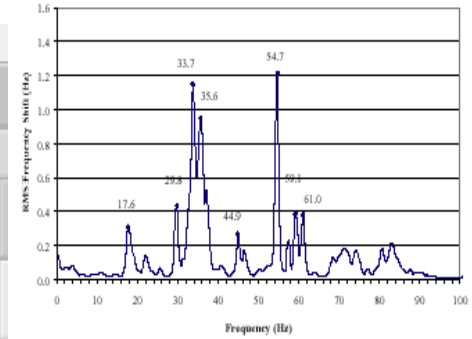

RF Systems
(Controls and Tuning)

Curt Hovater

$$\beta_{opt} = \sqrt{(b+1)^2 + \left[\frac{2\delta f}{\Delta f_o}\right]^2}$$

where $b = \frac{I_o (R/Q) Q_o}{V} \cos\phi$

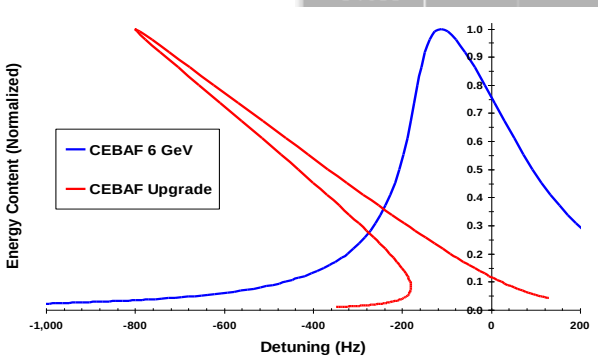

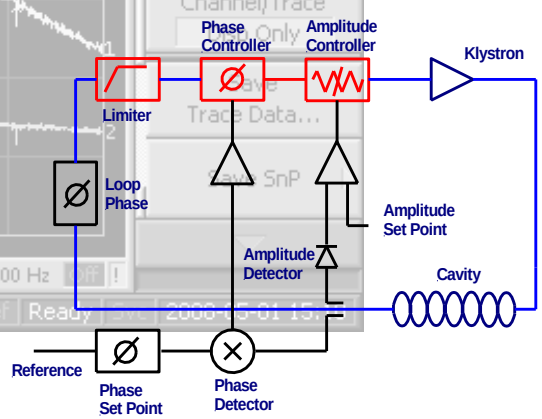

Outline

- RF Systems
- What are you controlling?
- Cavity Equations
- Control Systems
  - Cavity Models
- Algorithms
  - Generator Driven Resonator (GDR)
  - Self Excited Loop (SEL)
- Hardware
  - Receiver
  - ADC/Jitter
  - Transmitter
  - Digital Signal Processing
- Cavity Tuning & Resonance Control
  - Stepper Motor
  - Piezo

Accelerating Cavity RF System

- RF Systems are broken down into two parts.
- The high power section consisting of the power amplifier and the high power transmission line (waveguide or coax)
- The Low power (level) section (LLRF) consisting of the field and resonance control components

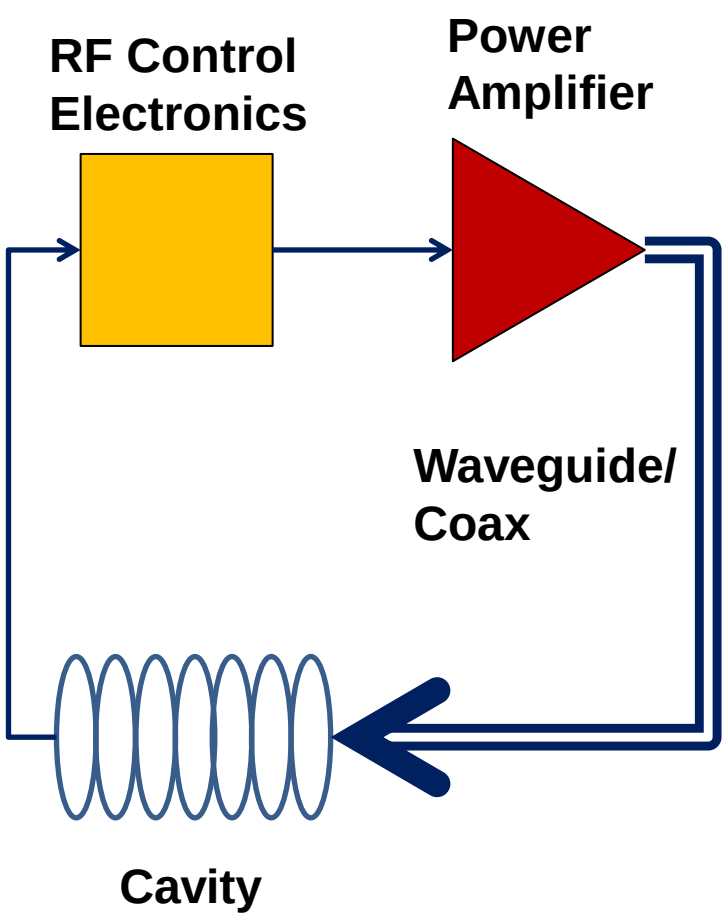

RF Power Amplifiers: Triode/Tetrode

- Think your grandfathers "Hi-Fi" stereo or your guitar amp.
- Intensity modulation of DC beam by control grid
- Efficiency ~ 50-70% (dependent on operation mode)
- Gain 10-20 dB
- Frequency dc – 500 MHz
- Power to 1 MW

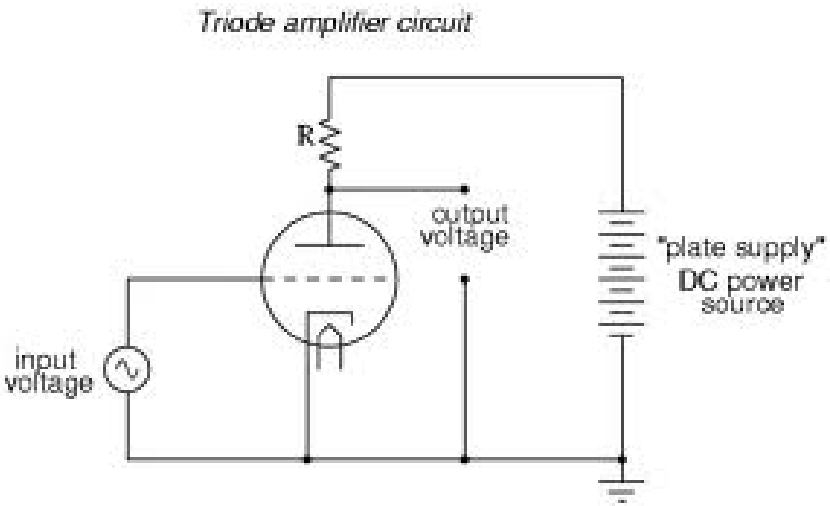

Triode

Tetrode

RF Power Amplifiers: Klystron

- Velocity modulation with input Cavity
- Drift space and several cavities to achieve bunching
- It is highly efficient DC to RF Conversion (50%+)
- High gain >50 dB
- CW klystrons typically have a modulating anode for
  - Gain control
  - RF drive power in saturation
- Power: CW 1 MW, Pulsed 5 MW
- Frequencies 300 MHz to 10 GHz+

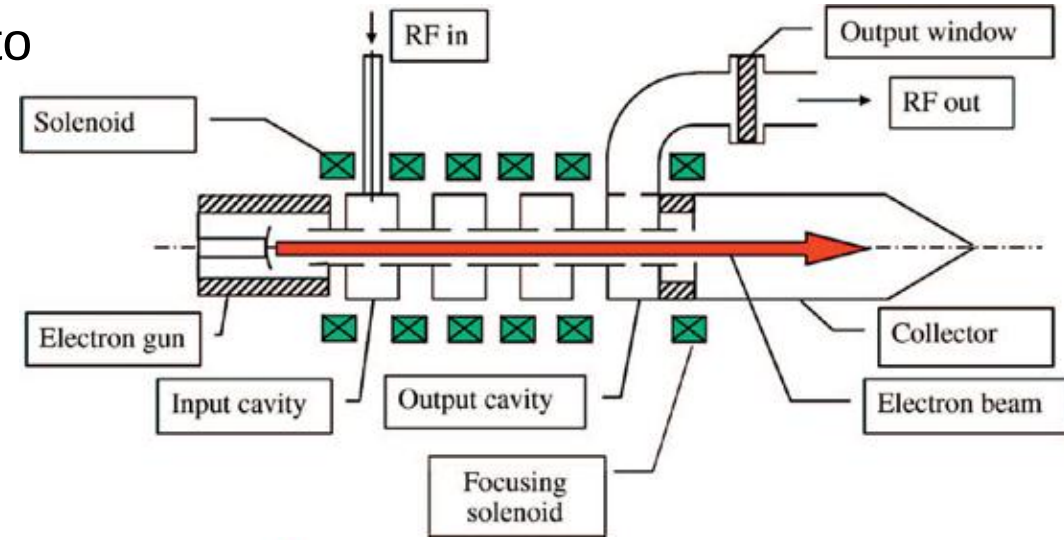

A. Nassiri CW SCRF workshop 2012

RF Amplifiers: IOT (Inductive Output Tubes)

- Intensity modulation of DC beam by control grid
- It is highly efficient DC to RF Conversion approaching 70%
- Unfortunately low gain 22 dB (max)
- Power: CW to 80 kW
- Frequencies 300 MHz to 1.5 GHz

A. Nassiri CW SCRF workshop 2012

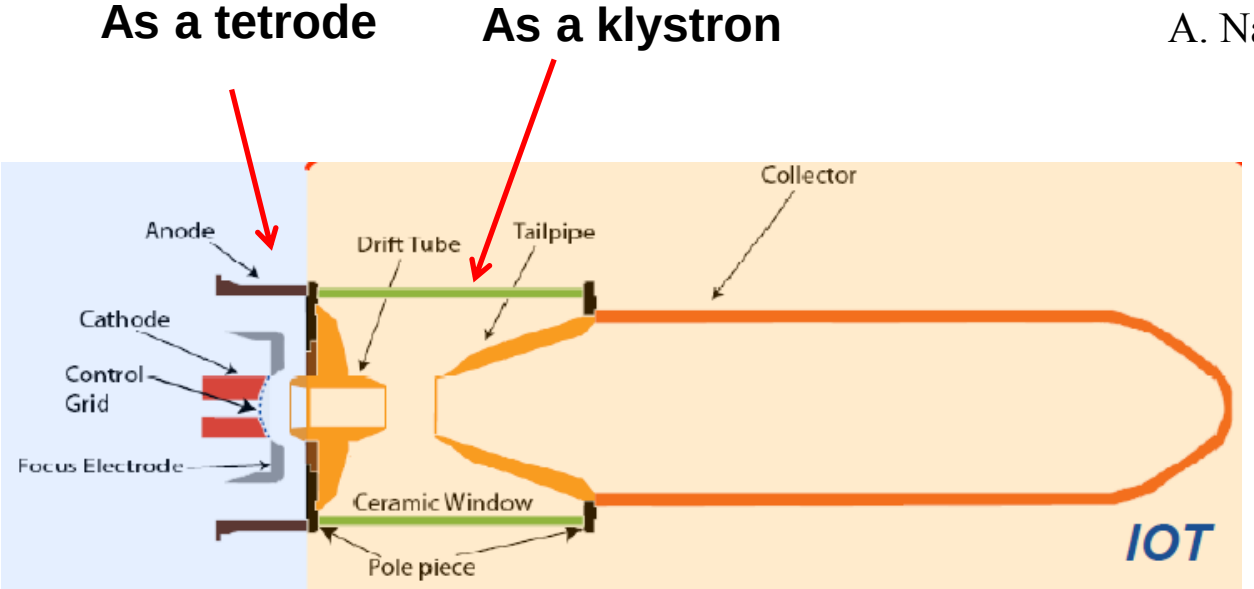

Power Amplifiers: Solid State

- RF Transistor
- Efficiencies 40%+ (depends on operating mode)
- Gain ~ 15 dB
- Power
  - 2 kW at 100 MHz
  - 1kW at 1000 MHz
- Frequency to 3 GHz
- Need to combine many transistors to get to very high power 5kW +

RF Transistor

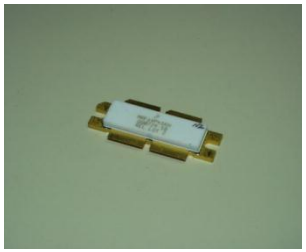

RF Transistor mounted

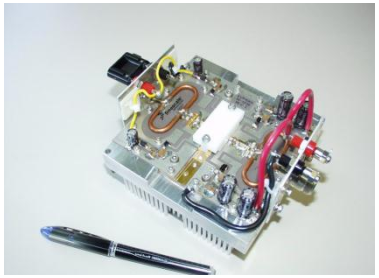

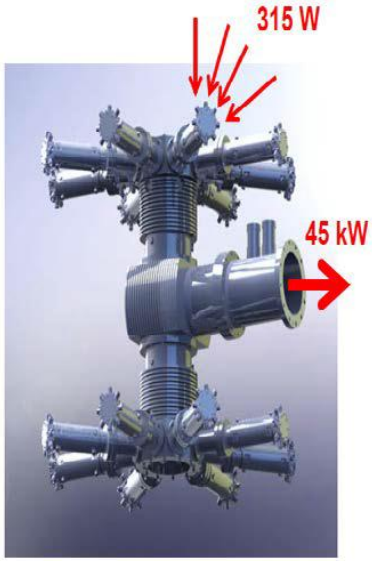

160 way power combiner (AREVA)

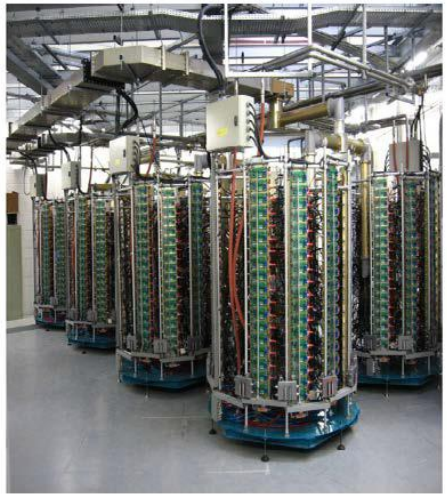

180 kW 350 MHz solid state amplifier, each column 45 kW (Soleil)

A. Nassiri CW SCRF workshop 2012

Control Systems

- HVAC i.e. your house's heating and A/C
- Set temperature
- System applies heat/cooling to keep house at the set point

- Cavity RF control system
- Set phase and amplitude
- System applies phase/amplitude to keep cavity field at the set points

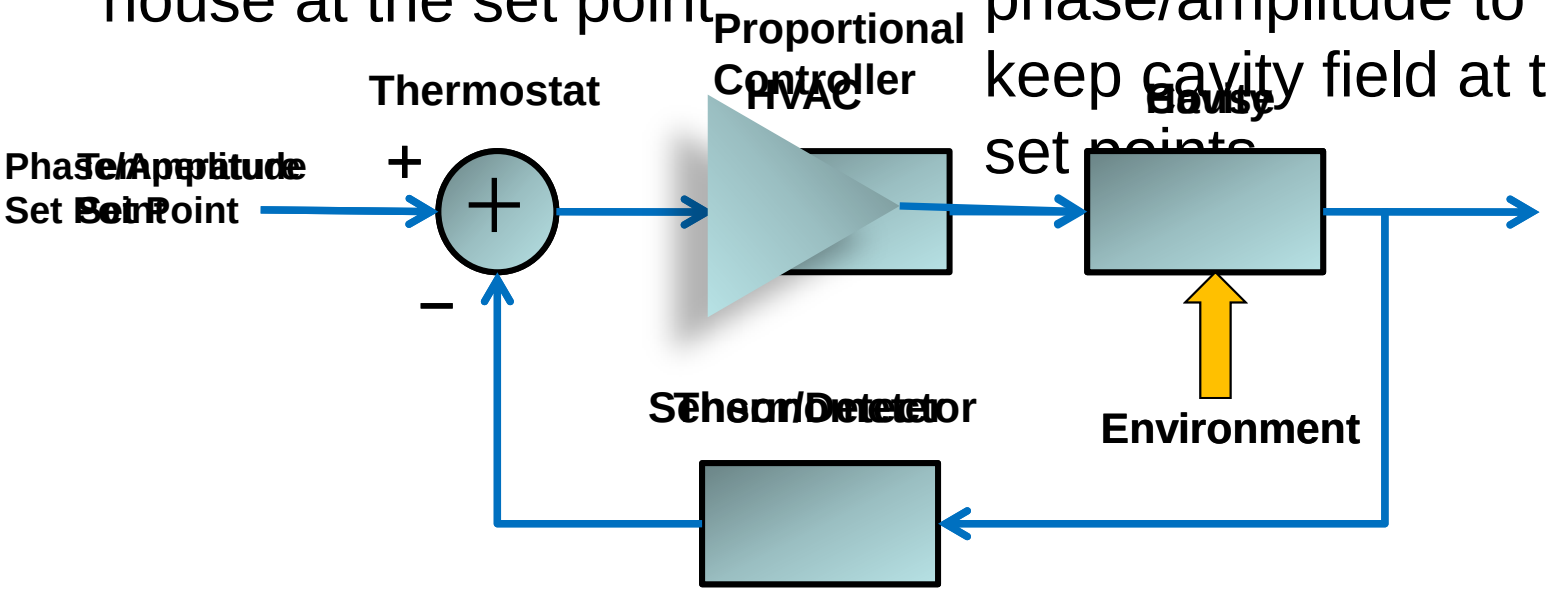

RF Control Challenges/Starting Points

- **Required Field Control to meet accelerator performance:**
  - **Proton/ion Accelerators: 0.5^{o} and 0.5%**
  - **Nuclear Physics Accelerators: 0.1^{o} and 0.05%**
  - **Light Source: 0.01^{o} and 0.01%**
- **Loaded *Q* Optimized for beam loading:**

  Nuclear Physics < 1 mA,

  ERLs close to zero net current

  Light Sources 10's of μA to 100 mA (high current in injectors)
- **Microphonics & Lorentz Detuning: Determined by cavity/cryomodule design and background environment.**
- **Master Oscillator/Timing/Synchronization: Determined by application (light sources < 100 fs, frequently < 20 fs).**
- **Accelerator Specific: Operational, Reliability/Maintainability Access etc.**

Particle Acceleration

- For relativistic particles you want the electron bunch on crest.*
- If the stability of the cavity field effects the longitudinal emittance….energy spread
- **Field control specification folds back from the end users energy spread requirements**

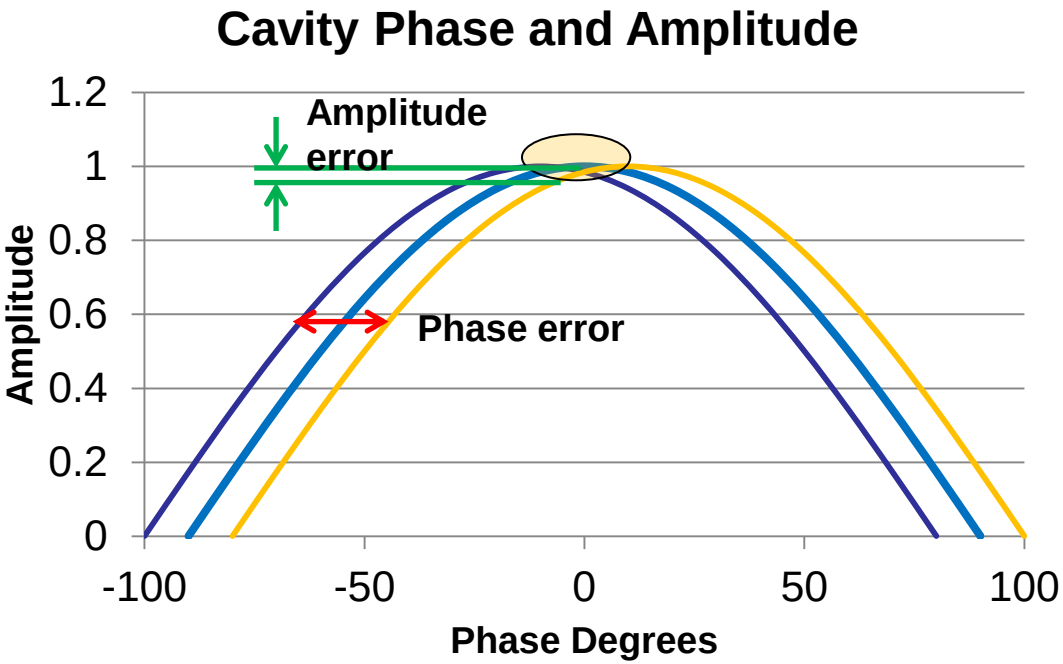

*** There are special circumstances where the cavities are operated off crest. Examples particle bunching in injectors and FELS**

Understand What You Are Controlling

- Cavity: what's the frequency and Q_{ext}
- Pulsed, CW, both
- Cavity Gradient
- Lorentz detuning
- Field regulation
- Residual microphonic background
- Beam current
- Klystron/IOT/amplifier effects
- Other cavity pass bands
- He pressure drifts
- Fault Recovery

SNS Cavity Mechanical Modes

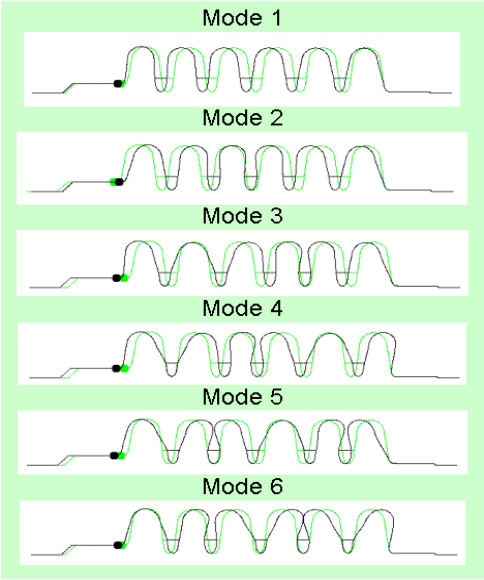

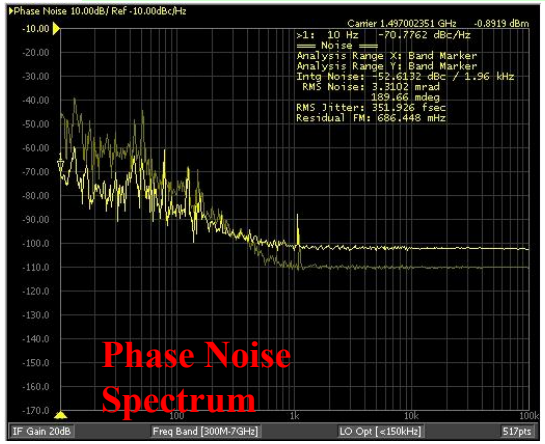

Phase Noise Spectrum

Don't Over Build the Control System ….KISS

Cavity Microphonics

- **Determines the feedback gain needed for operation**
- **Determines the Q_L and the klystron power for lightly loaded cavities**

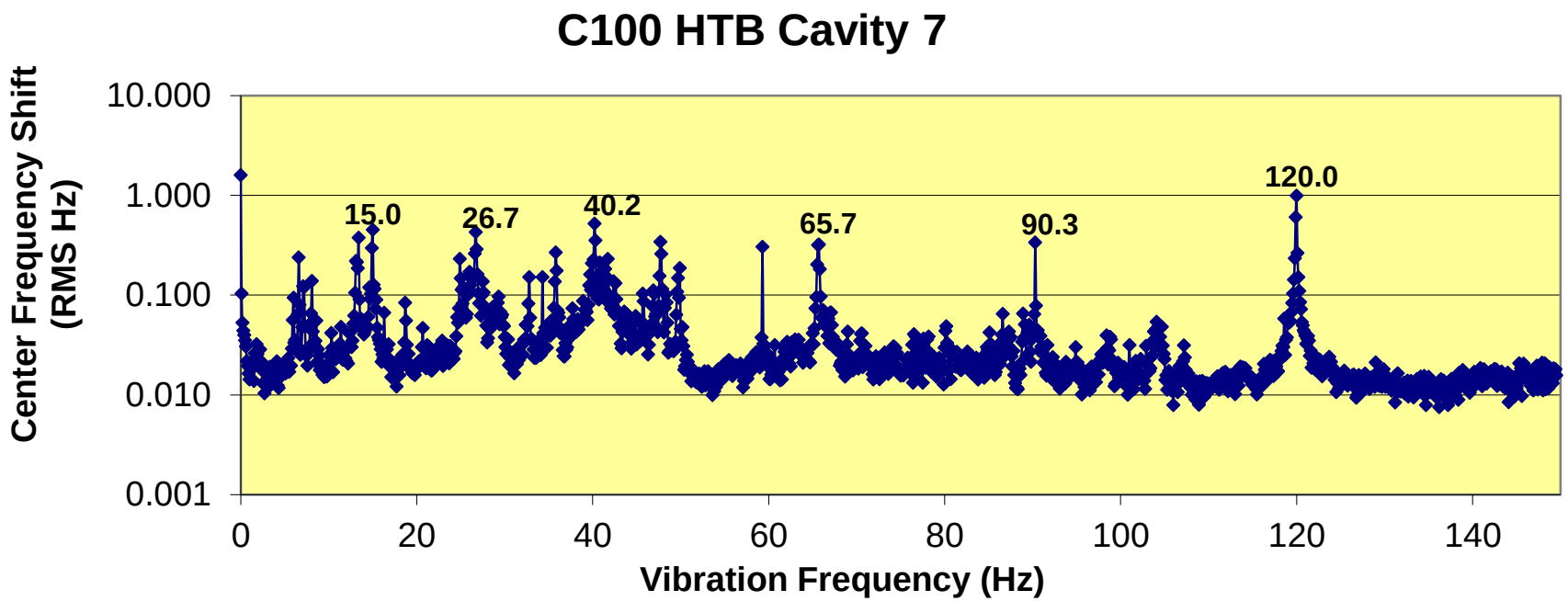

References: 3

Cavity Microphonics Cont.

Microphonic Detuning*	Renascence (stiffened)	C100
RMS Amplitude (Hz)	1.98	3.65
6σ(Hz) ~ Peak	11.9	21.9

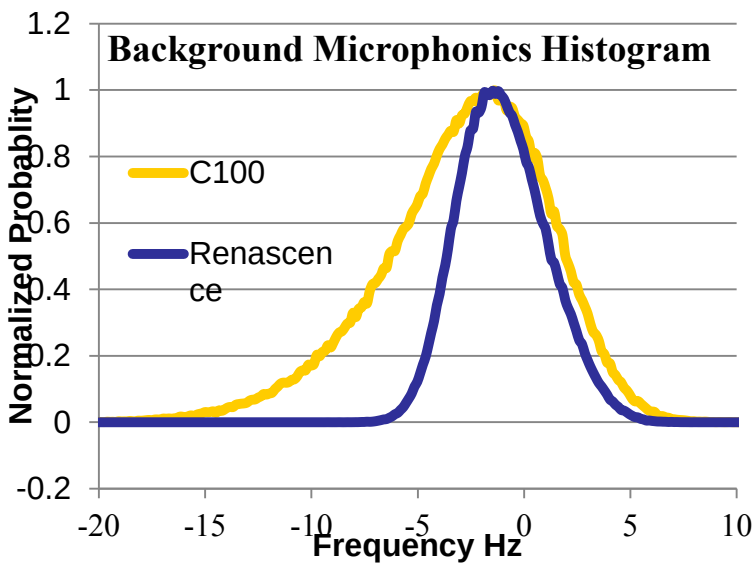

*Data Taken in Same Environment

Microphonic Impact on cavity power operating at 20 MV/m (100 μA of beam)

- C100 = 5.3 kW
- REN = 3.3 kW

Potential for cost reduction

- Utility
- Power amplifier

Cryomodule design should incorporate features to reduce microphonics.

References: 3

Lorentz Detuning

- **RF power produces radiation pressures :** $P = (\mu_0 H^2 - \varepsilon_0 E^2)/4$

- **Pressure deformations produce a frequency shift :**

$$\Delta f = K_L E^2_{acc}$$

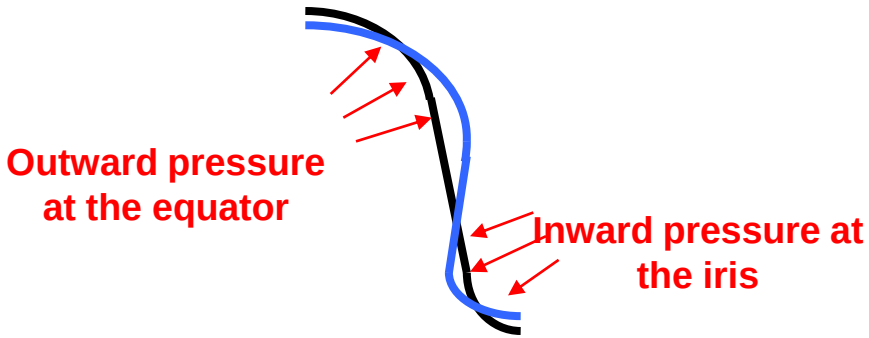

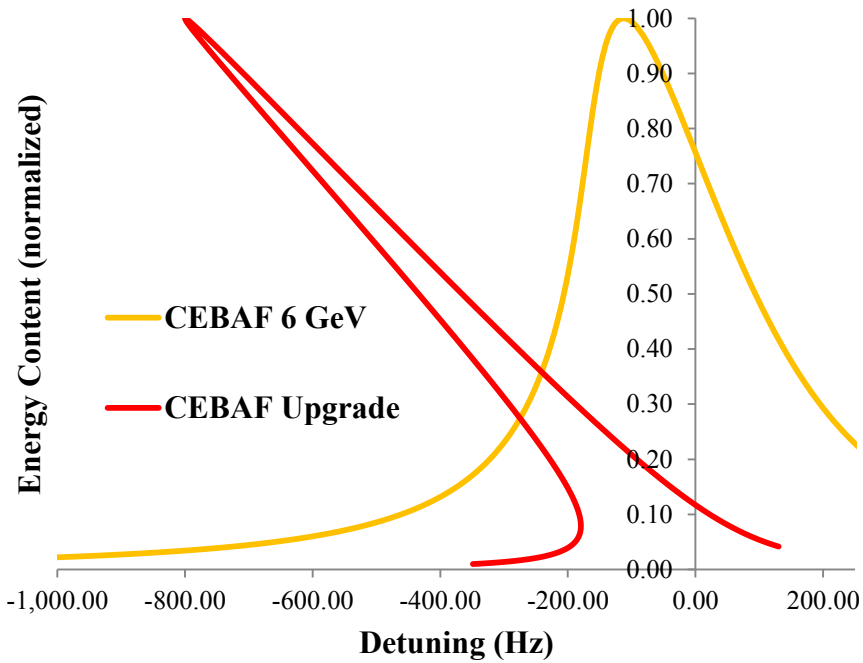

The Quadratic relationship with Gradient becomes an issue at the high gradients (15+ MV/m) needed for new accelerators

References: 4,5

Cavity Equivalent Circuit

The simplest representation of a cavity is a parallel LRC circuit

$$V_c(t)=v_c e^{j\omega t}$$

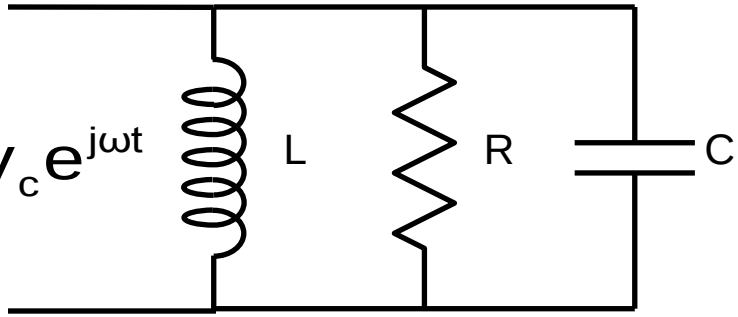

$$Z=\left(\frac{1}{R}+\frac{1}{j\omega L}+j\omega C\right)^{-1}$$

Coupling to the cavity can be represented by a transformer and then reduced to the following circuit

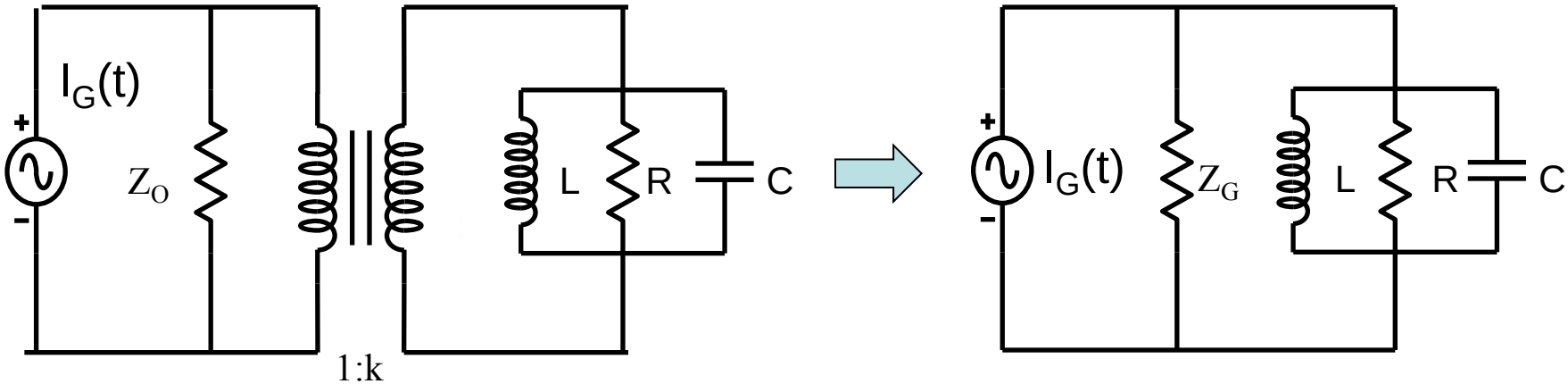

where $Z_G = k^2 Z_O$ And the coupling β is defined $\beta \equiv \frac{1}{k^2}\frac{R}{Z_O}$

References: 1

SC Cavity Equivalent Circuit Terms

R_{sh}	Shunt Impedance	Ω		R_L	Loaded Shunt impedance	Ω
r/Q	Geometry Factor	Ω		Q_o	Intrinsic Quality Factor	
E	Electric Field	V/m		Q_L	Loaded Quality Factor	
l	Electrical Length	m		P_g	Generator Power	W
f_o	Cavity Frequency	Hz		P_c	Cavity Dissipated Power	W
W	Stored Energy	J		Ψ_b	Beam Phase	
β	Coupling Coefficient			I_b	Beam Current	A
Ψ	Tuning Angle			V_c	Cavity Voltage	V
δf	Cavity Detuning	Hz		Δf_o	Cavity Bandwidth	Hz
δf_o	Static Detuning	Hz		δf_m	Microphonic Detuning	Hz

Basic Cavity Formulas

Substitutions for L & C

$$\omega_o = \frac{1}{\sqrt{LC}} \qquad C = \frac{Q_O}{\omega_o R}$$

Shunt Impedance

$$R_{sh} = \frac{V_c^2}{P_C} \text{ or from circuit theory } R_{sh} = \frac{V_c^2}{2P_C}$$

Loaded Q and Shunt Impedance

$$Q_L = \frac{Q_O}{1+\beta} \qquad R_L = (r/Q)Q_L$$

Generator Power

$$P_g = \frac{V_c^2}{R_L}\frac{(1+\beta)}{4\beta}\left\{\left[1+\frac{I_O R_L}{V_c}\cos\Psi_b\right]^2 + \left[\tan\Psi - \frac{I_O R_L}{V_c}\sin\Psi_b\right]^2\right\}$$

Detuning Angle

$$tan\Psi = -2Q_L\frac{\Delta\omega}{\omega_O} = -2Q_L\frac{\delta f}{f_O}$$

Total Detuning

$$\delta f = \delta f_o + \delta f_m$$

References: 1, 27

Equivalent Circuit: Cavity + Klystron + Beam

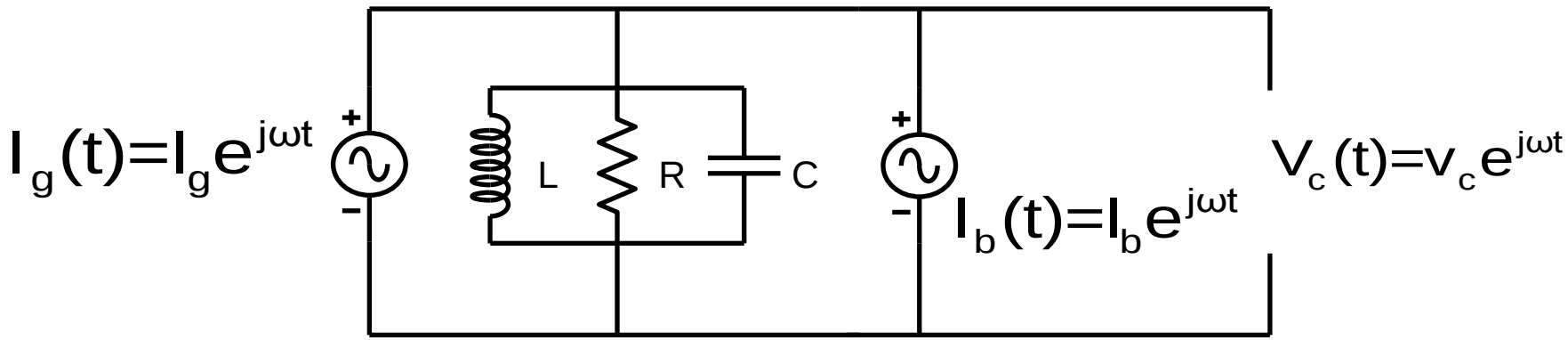

- **Beam and RF generator are represented by a current source**

I_b produces V_b with phase Ψ which is the detuning angle
I_g produces V_g with phase Ψ

Cavity Voltage $V_c = V_g - V_b$

$$V_C = \frac{R_L}{2} I_G \cos\Psi - \frac{R_L}{2} I_B \cos\Psi$$

References: 1, 19

Phasor Diagram

$$V_C = \frac{R_L}{2} I_G \cos\Psi - \frac{R_L}{2} I_B \cos\Psi$$

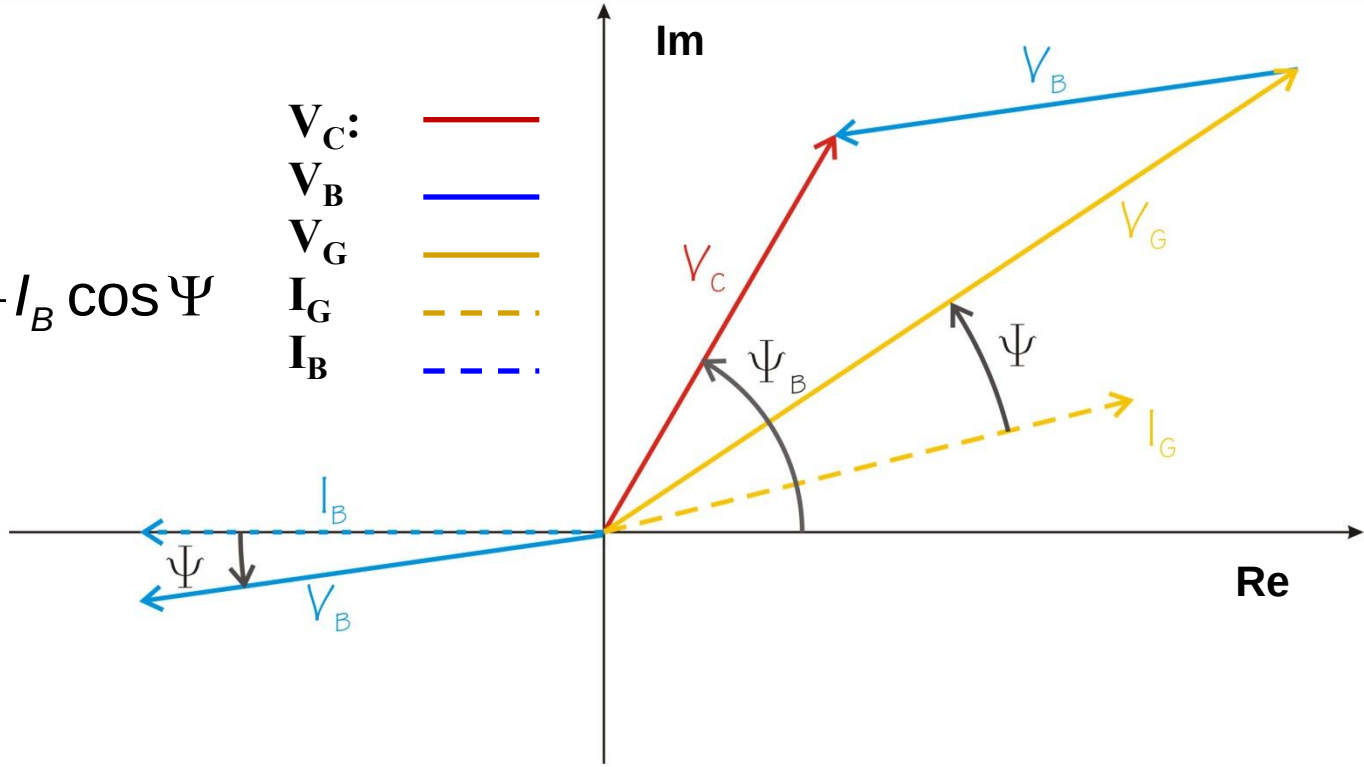

$$V_B = \frac{R_L}{2} I_B \cos\Psi$$

$$P_G = \frac{1}{16\beta} R_{Sh} I_G^{\,2} \quad \Rightarrow \quad V_G = \frac{2\beta^{1/2}}{(1+\beta)^{1/2}} (P_G R_L)^{1/2} \cos\Psi$$

References: 1, 2, 19, 20

Q_L Optimization for Minimum Power

From generator power
We can determine the
Minimum power needed

$$P_g = \frac{V_c^2}{4\frac{r}{Q}Q_L}\left\{\left[1+bQ_L\cos\Psi_b\right]^2+\left[2Q_L\frac{\delta f}{f_O}+bQ_L\sin\Psi_b\right]^2\right\}$$

Substituting in for b where

$$b=\frac{I_O}{V_c}\frac{r}{Q}$$

Some assumptions

$$Q_O >> Q_L \text{ therefore } \beta \approx \frac{Q_O}{Q_L}$$

Differentiating Pg with respect to Q_L and setting it to zero leads to optimum Coupling Q

$$Q_{Lopt}=\left[b^2+4(\frac{\delta f}{f_O})^2+4(\frac{\delta f}{f_O})b\sin\Psi_b\right]^{-1/2}$$

For beam on crest Ψ_b=0

$$Q_{Lopt}=\left[(\frac{I_O}{V_c}\frac{r}{Q})^2+4(\frac{\delta f}{f_O})^2\right]^{-1/2}$$

And if $I_o = 0$

$$Q_{Lopt}=\frac{f_O}{2\delta f}$$

And if $I_o >> 0$

$$Q_{Lopt}\cong V/I_O(r/Q)$$

References: 1, 20

Q_L Optimization: Lightly/non Beam Loaded Cavity

Beam on Crest

$$Q_{Lopt} \cong f_o / 2\delta f$$

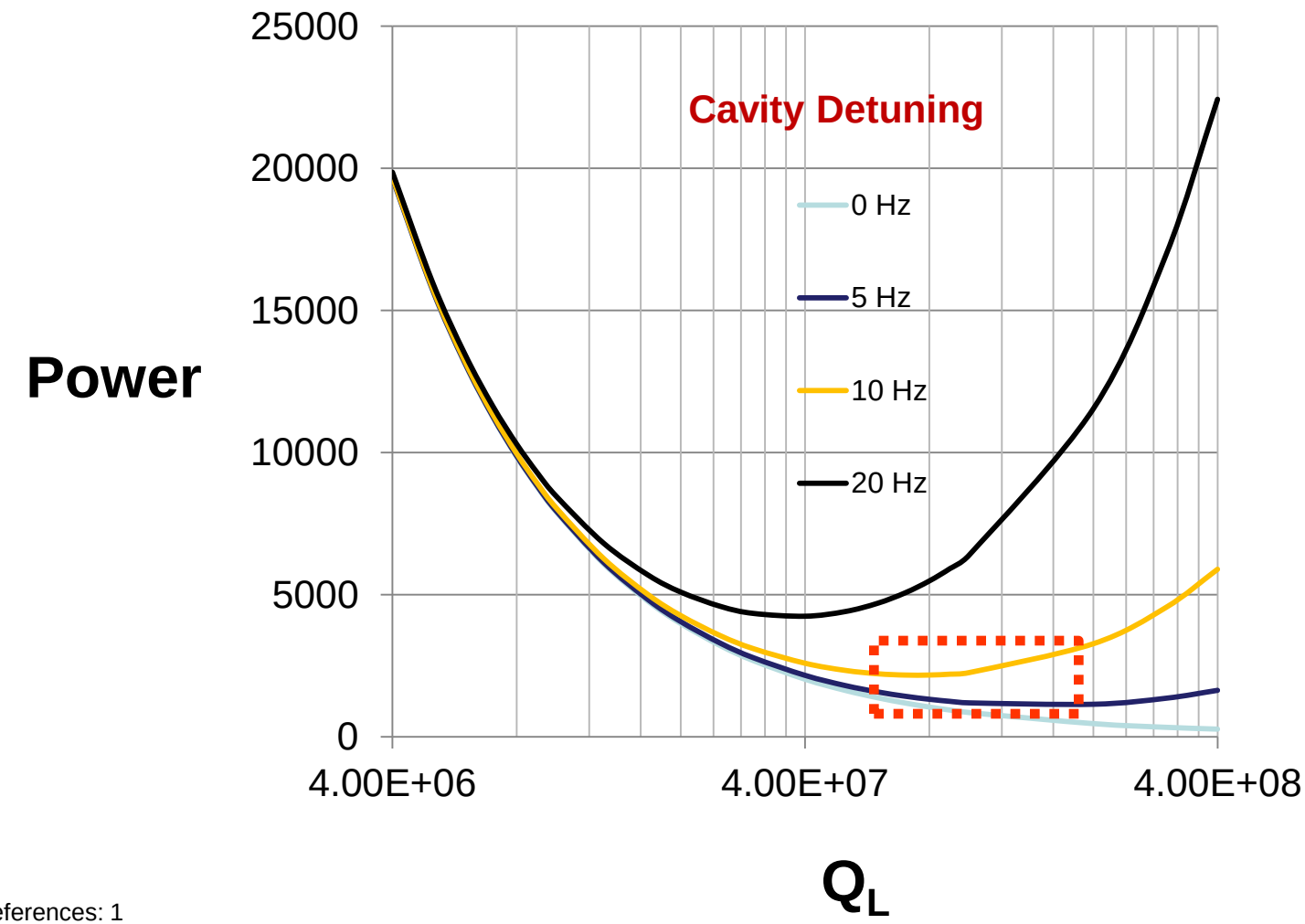

I = 10 μA

References: 1

Q_L Optimization: Beam Loaded Cavity

Beam on Crest

$$Q_{Lopt} \cong V / I_O (r / Q)$$

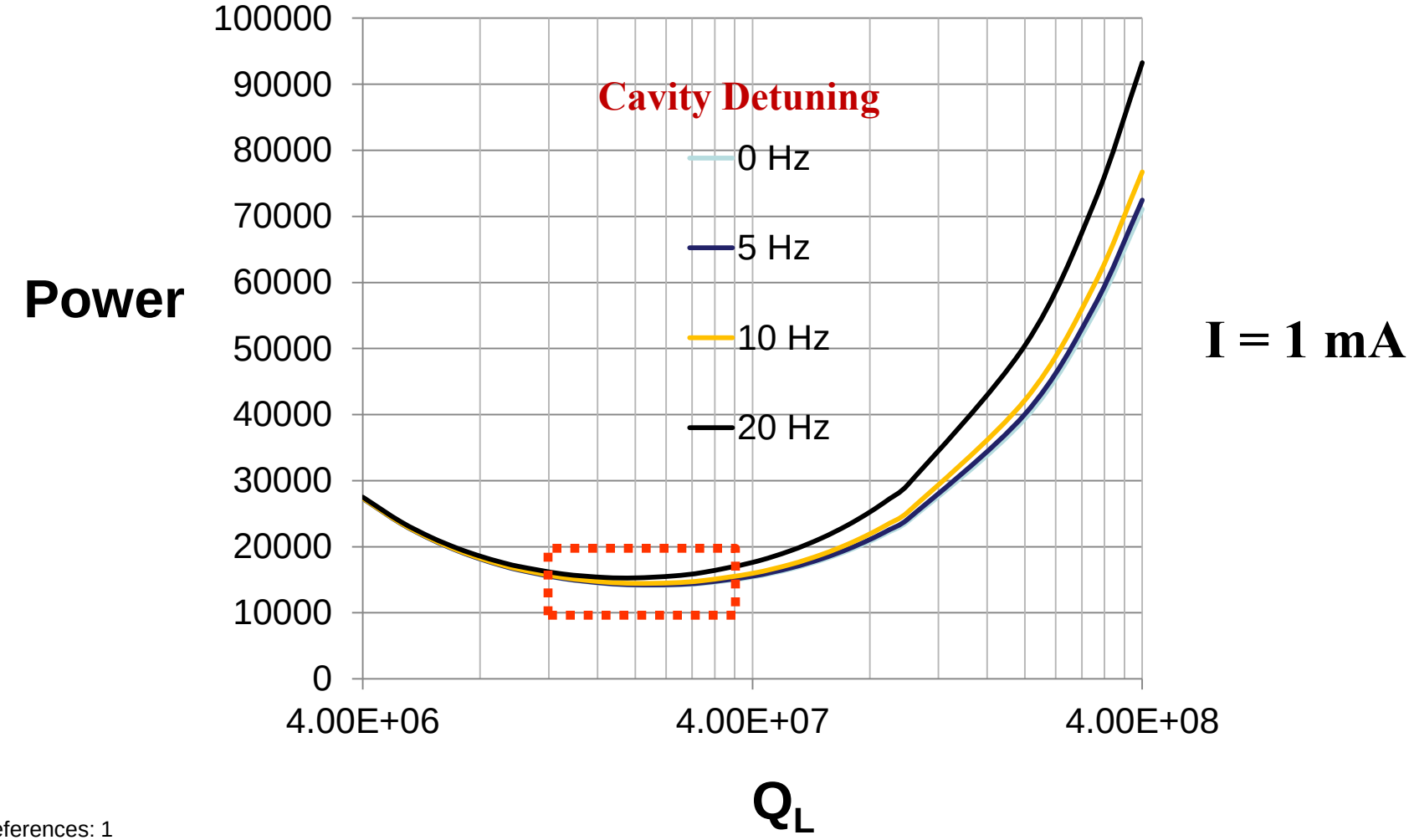

References: 1

Electronic and Mechanical Control
When to apply

$$\delta f = \delta f_o + \delta f_m$$

δf_o is the static detuning or slow detuning …..< 1 Hz

- Use active mechanical tuning to control cavity frequency

δf_m is the fast detuning do to microphonics ……>10 Hz

- Use active electronic feedback for field control

Gray area between 1 and 10 Hz

Control Systems

Classic "Plant-Controller" can be used to model the RF control system

Cavity

- Can be modeled a variety of ways.
- Lorentz force can be added as a non-linear element
- Mechanical modes can also be included

Power Amplifier (Klystron, IOT, Solid State, etc.)

- Saturation effects

Hardware

- Group delay (line delay, processing latency etc.)

Modeling software such as Matlab/Simulink has made this rather easy.

Controller – Plant System Representation

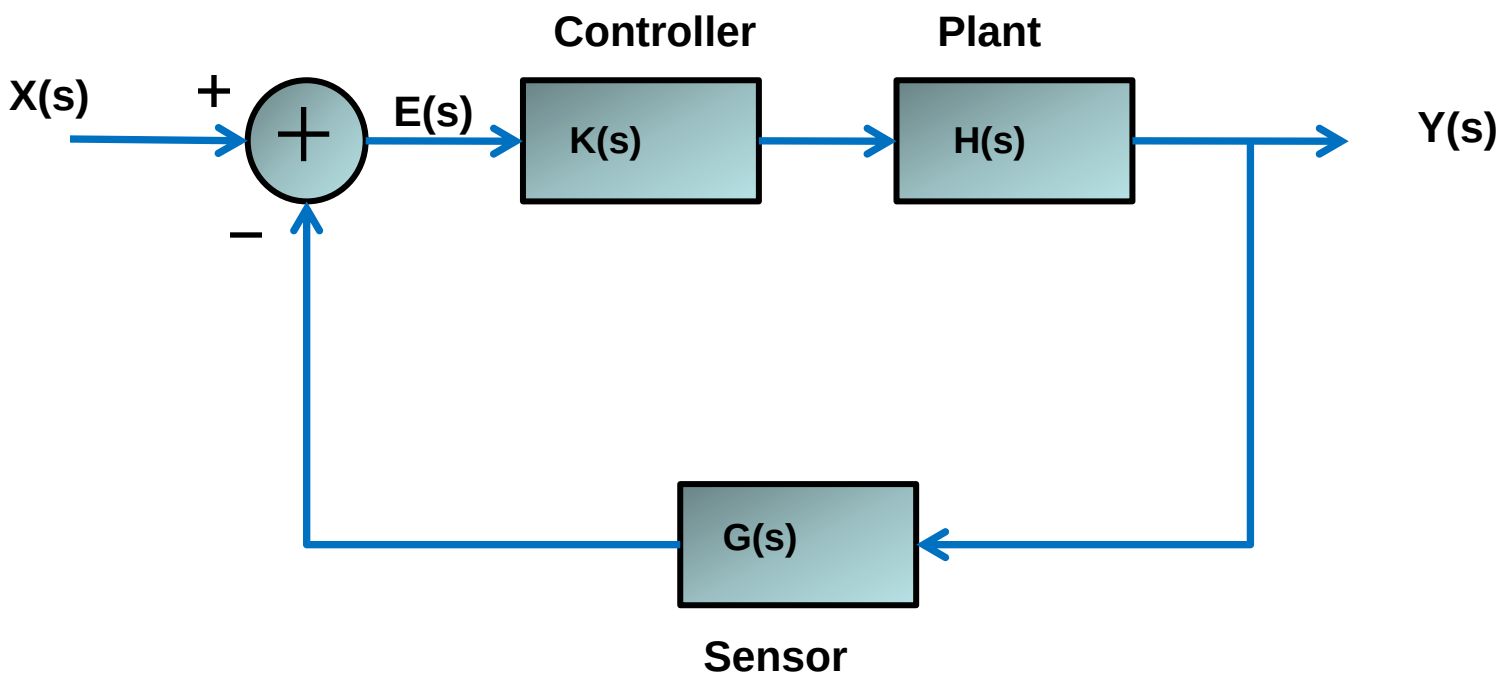

Need to solve for close loop transfer function: Y/X

$$E(s) = X(s) - G(s)Y(s)$$
$$Y(s) = K(s)H(s)E(s)$$

$$\Rightarrow \quad \frac{Y(s)}{X(s)} = \frac{H(s)K(s)}{1 + H(s)K(s)G(s)}$$

References: 28

Plant (Cavity) Transfer Function

Want Output/Input (V/I) assume Parallel RLC circuit with current source

$$I = \frac{V}{R} + \frac{V}{j\omega L} + j\omega CV$$

$$\frac{V}{I} = \frac{j\omega RL}{\omega^2 RLC + j\omega L + R}$$

Convert to s domain

$$\frac{V(s)}{I(s)} = G(s) = \frac{sRL}{s^2 RLC + sL + R}$$

Sub for L&C

$$G(s) = \frac{\frac{\omega_O R_L}{Q_L} s}{s^2 + \frac{\omega_O}{Q_L} s + \omega_O^2}$$

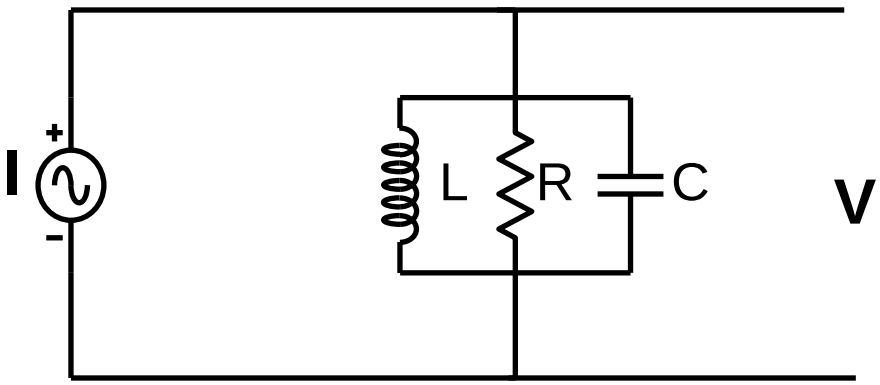

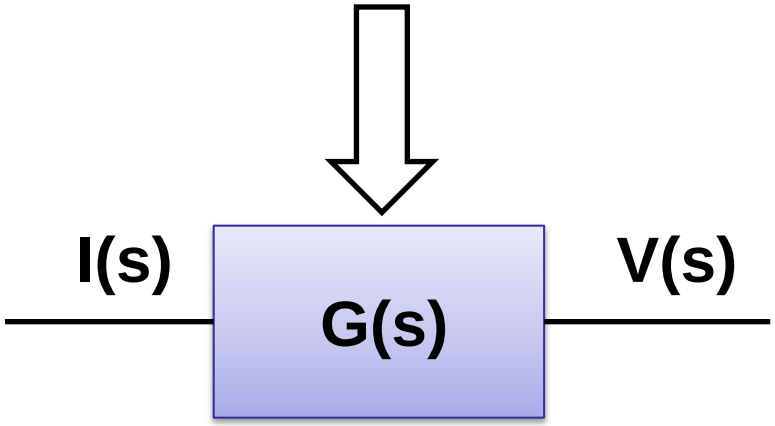

$$V(s) = G(s) \cdot I(s)$$

References: 28

Cavity Transfer Function

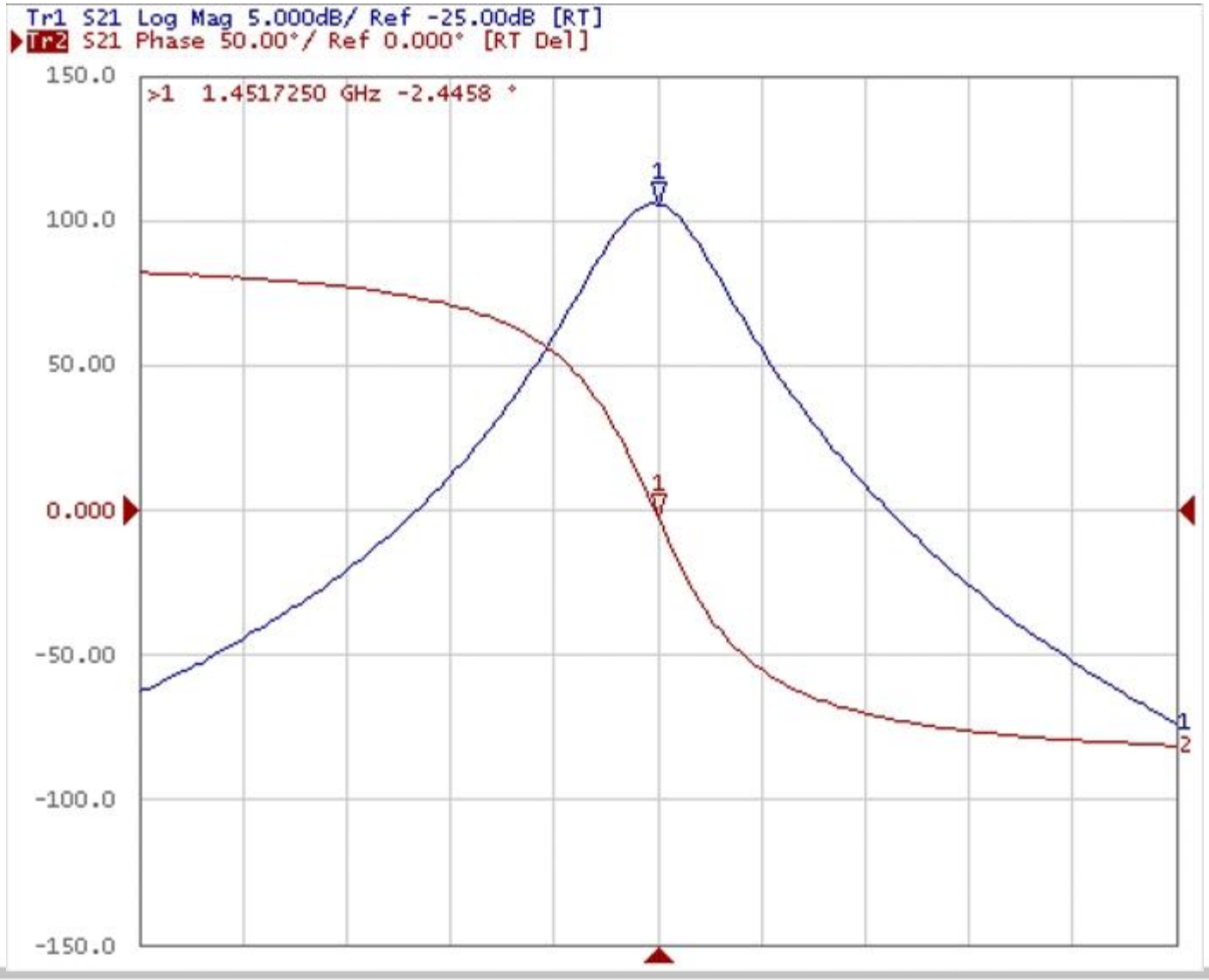

State Space Representation for a Cavity

We are only interested in the time scale of the detuning microphonics. Therefore we can model the cavity at baseband using a complex envelop by separating V(t) and I(t) into I and Q terms .

$$V(t) = \left[V_R(t) + jV_I(t)\right] \cdot e^{j\omega t} \qquad I(t) = \left[I_R(t) + jI_I(t)\right] \cdot e^{j\omega t}$$

From the 2nd ODE for a driven oscillator $\ddot{V}(t) + \frac{\omega_O}{Q_L}\dot{V}(t) + \omega^2 V(t) = \frac{\omega_O}{Q_L} R_L \dot{I}(t)$

Want the state form $\dot{x} = Ax + Bu$ **where A and B are state Matrixes**

Ignoring 2nd derivative terms (small compared to lower order terms), assume that ω/ω_o~ 1 and $\Delta\omega=\omega_o-\omega$ is the cavity detuning

$$\dot{V}_R + \frac{\omega_O}{2Q_L} V_R + \Delta\omega V_I = R_L \frac{\omega_O}{2Q_L} I_R$$

$$\dot{V}_I + \frac{\omega_O}{2Q_L} V_I - \Delta\omega V_R = R_L \frac{\omega_O}{2Q_L} I_I$$

$$A = \begin{pmatrix} -\frac{\omega_O}{2Q_L} & -\Delta\omega \\ \Delta\omega & -\frac{\omega_O}{2Q_L} \end{pmatrix} \qquad x = \begin{pmatrix} V_R \\ V_I \end{pmatrix}$$

$$B = \begin{pmatrix} R_L \frac{\omega_O}{2Q_L} & 0 \\ 0 & R_L \frac{\omega_O}{2Q_L} \end{pmatrix} \qquad u = \begin{pmatrix} I_R \\ I_I \end{pmatrix}$$

References: 18, 28, 35

Control System Stability

***"Quickest way to build an oscillator is to design a control system."* …..various authors**

- An unstable condition occurs when Gain >1 and the phase shift through the system is more than 180 degrees.
- Know your poles! Since we are working with sc cavities the first pole will be the ½ cavity bandwidth (10 – 1000 Hz)
- Each pole contributes 90 degrees starting a decade before the pole and ending a decade after.
- Need to do a phase delay budget all the way around the system, RF Controls-Klystron-waveguide-cavity-cables etc.

Control System Stability

There are many methods (Routh and Nyquist) to determine stability of a control system. Matlab will actually perform this analysis.

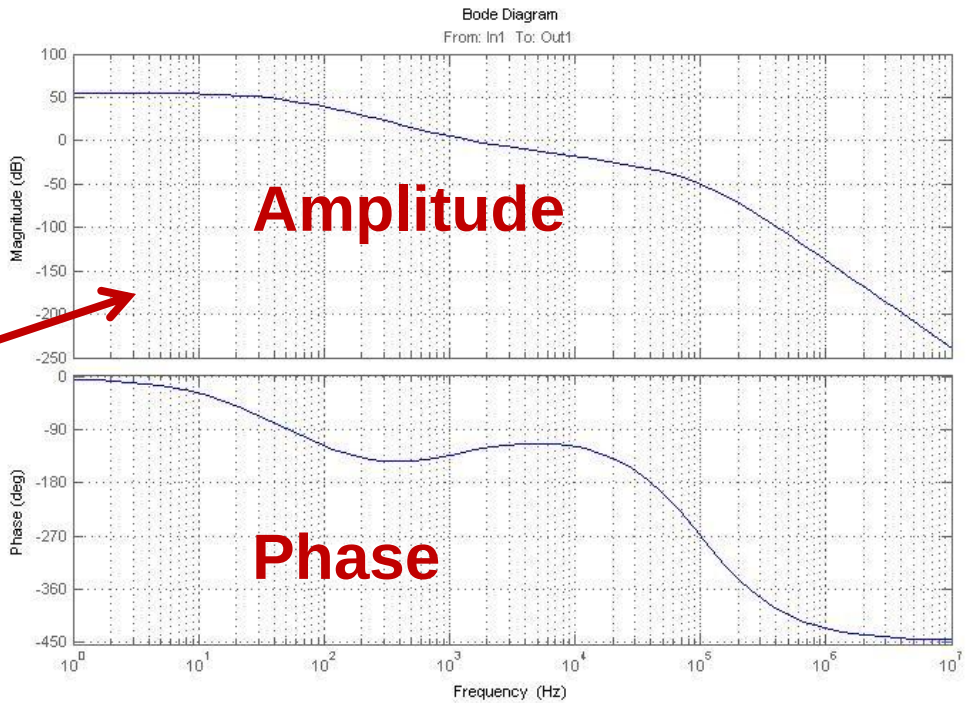

Bode Diagrams

- Graphically intuitive
- Give Phase and Gain margin
- Instabilities start as small peaks

Simple PID Cavity Control

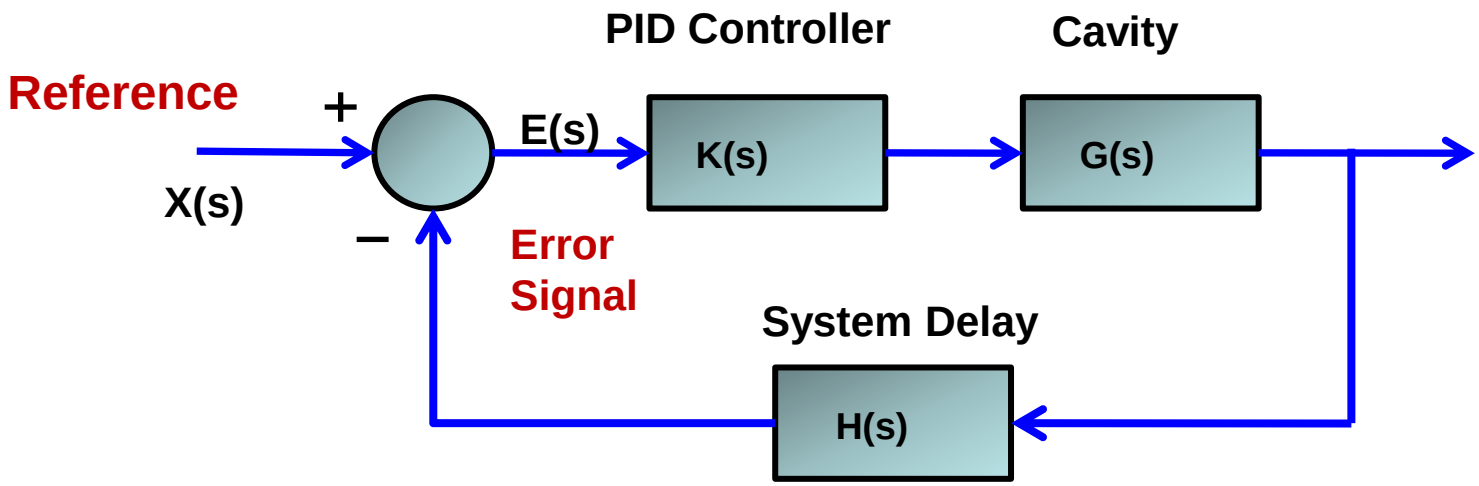

PID Function $$K(s) = K_P + \frac{K_I}{s} + K_D s = \frac{K_D s^2 + K_P s + K_I}{s}$$

System Delay
(Four Poles at 100 kHz) $$H(s) = \left(\frac{6.3\times10^5}{s + 6.3\times10^5}\right)^4$$

Cavity Bandwidth ~ 25 Hz $$G(s) = \frac{157}{s + 157}$$

References: 28

Cavity Bode Diagram (First Order Lowpass Filter)

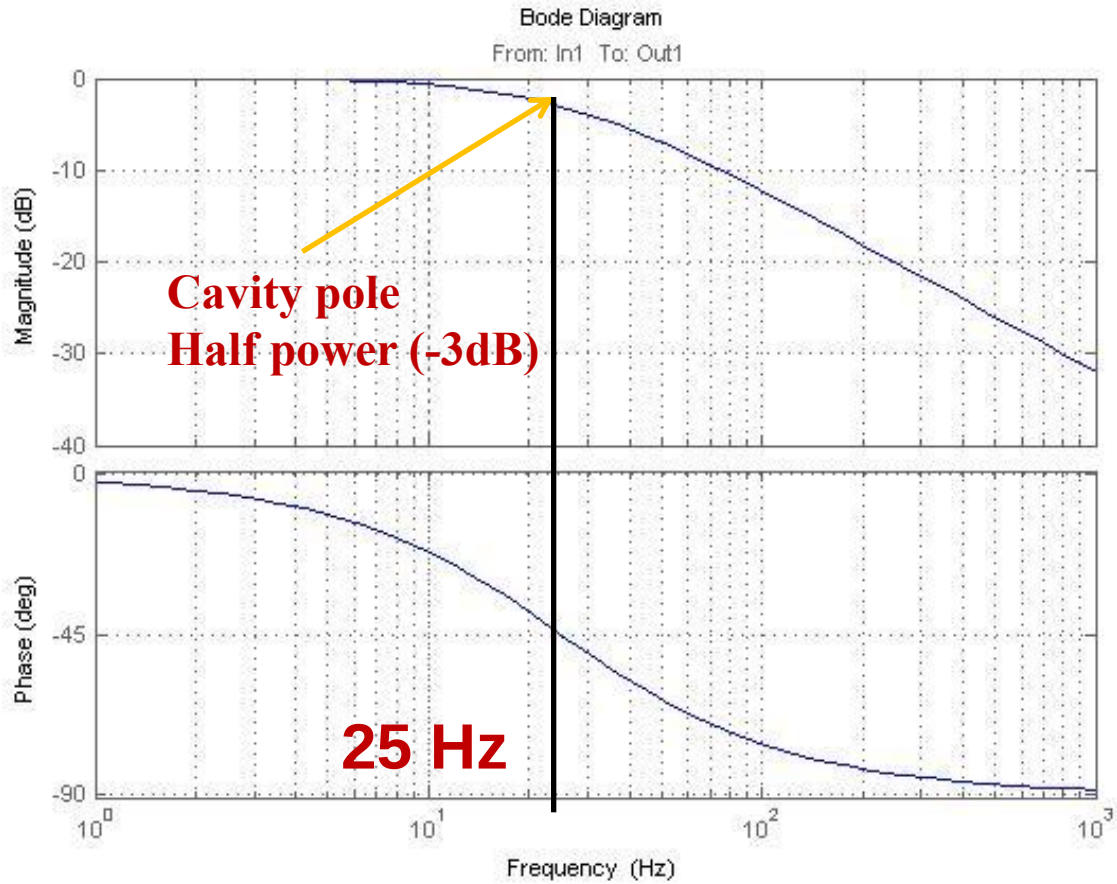

G(s) = a/(s+a)

$$G(s) = \frac{157}{s + 157}$$

Proportional-Integral-Derivative (PID) Controller

Proportional Term

$$P = K_P e(t) \Rightarrow K_P$$

Kp ~ proportional gain

e ~ error

Integral Term

$$I = K_I \int_0^t e(\tau) d\tau \Rightarrow \frac{K_I}{s}$$

K_I ~ integral gain

Derivative Term

$$D = K_D \frac{de(t)}{dt} \Rightarrow K_D s$$

KD ~ derivative gain

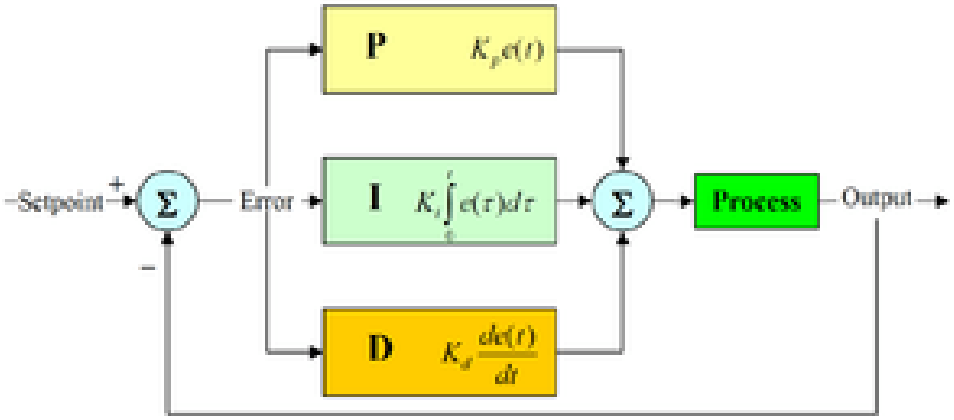

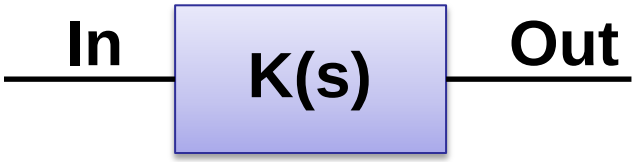

$$K(s) = K_P + \frac{K_I}{s} + K_D s = \frac{K_D s^2 + K_P s + K_I}{s}$$

References: 28

Cavity + Proportional Control

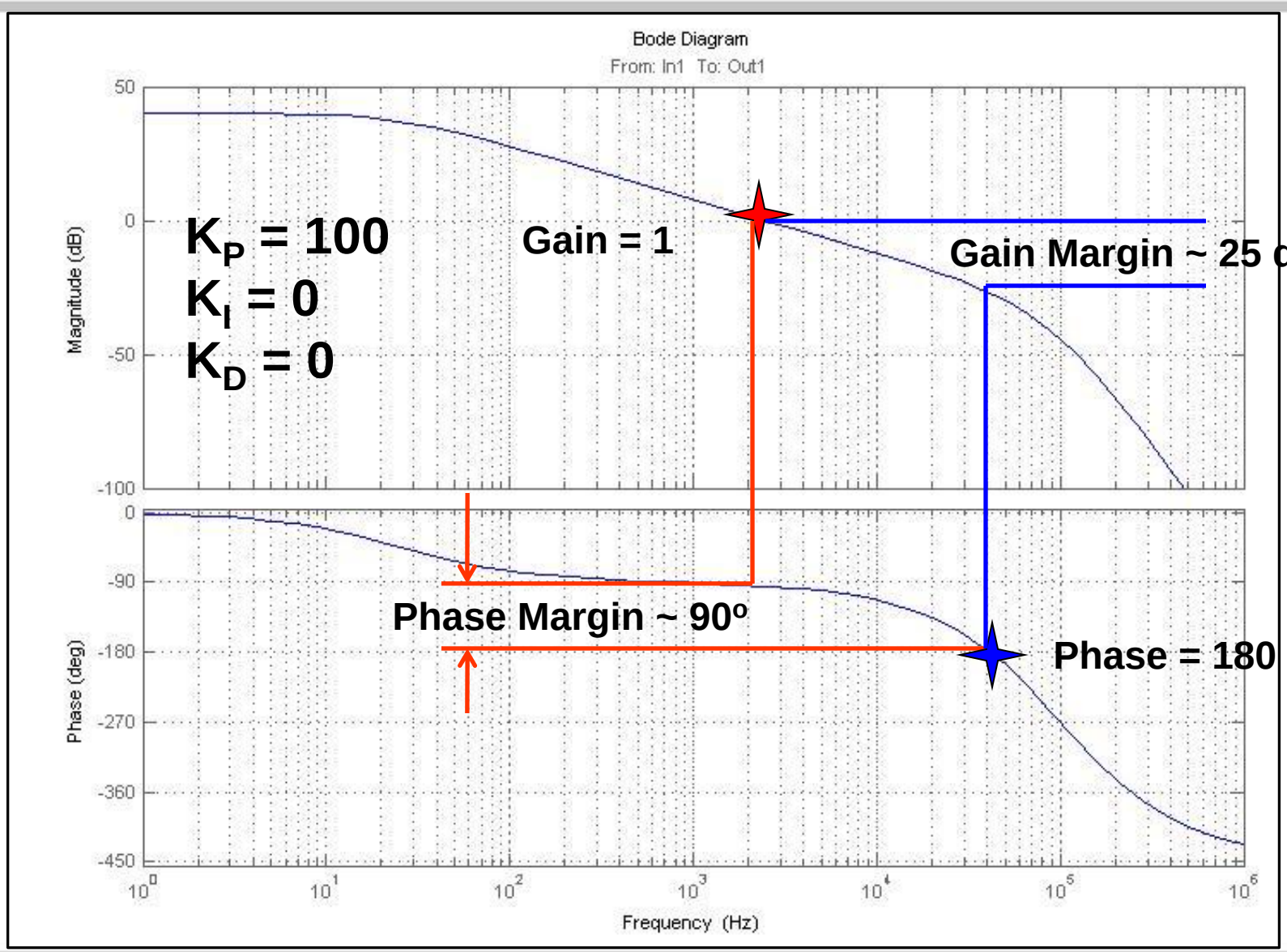

Proportional + Integral Control

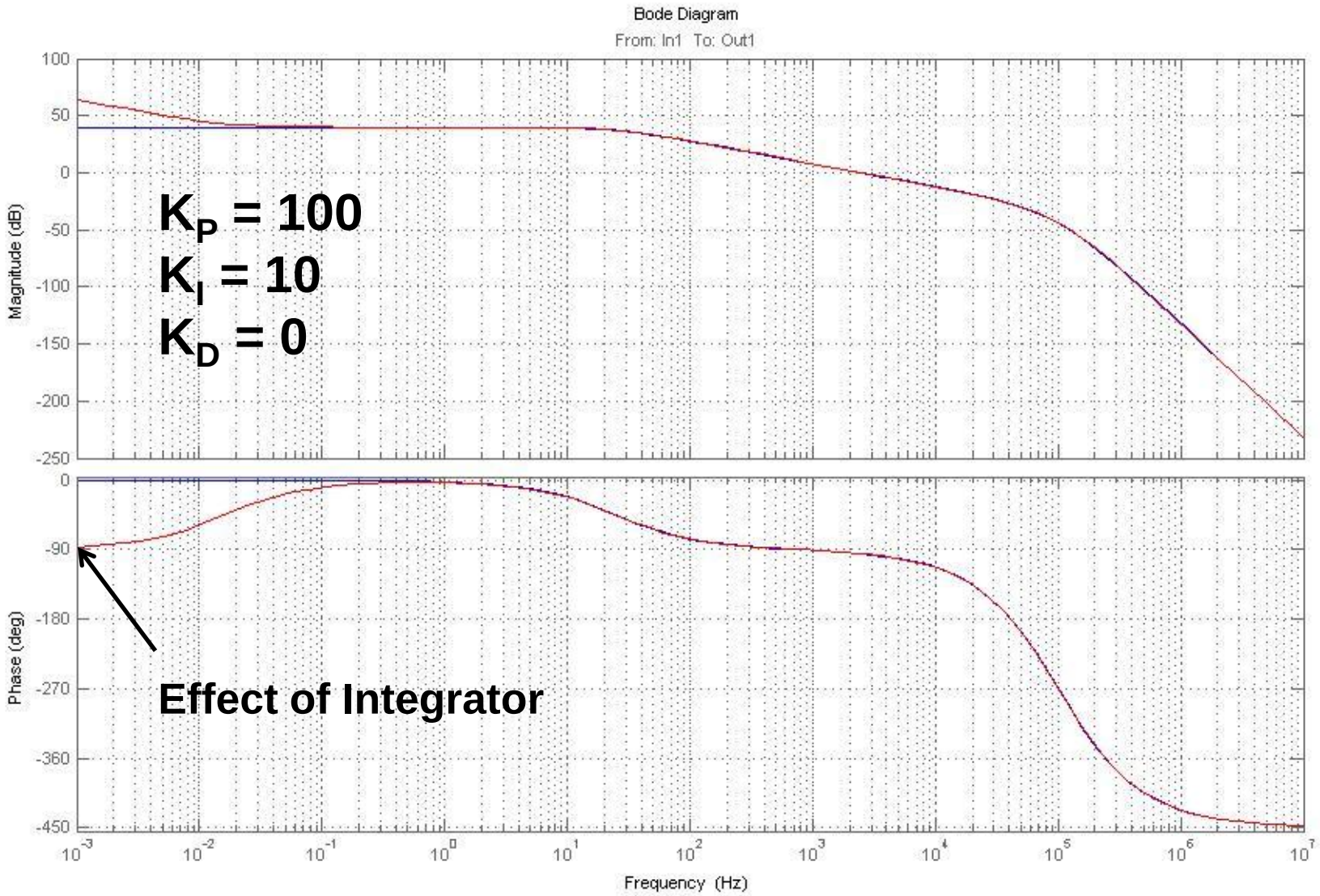

Proportional Gain …Approximate

- If the required closed loop control error signal is << than the open loop error signal (with out proportional gain), then the proportional gain (K_p) can be approximated by the following

K_p = (Open Loop error signal)/(required closed loop error signal)

This is a handy rule of thumb ……

RF System Models: LBL/SNS

- Numerical based model, coded in C
- Incorporates feedback and feed forward
- Cavity modeled at baseband as a low pass filter

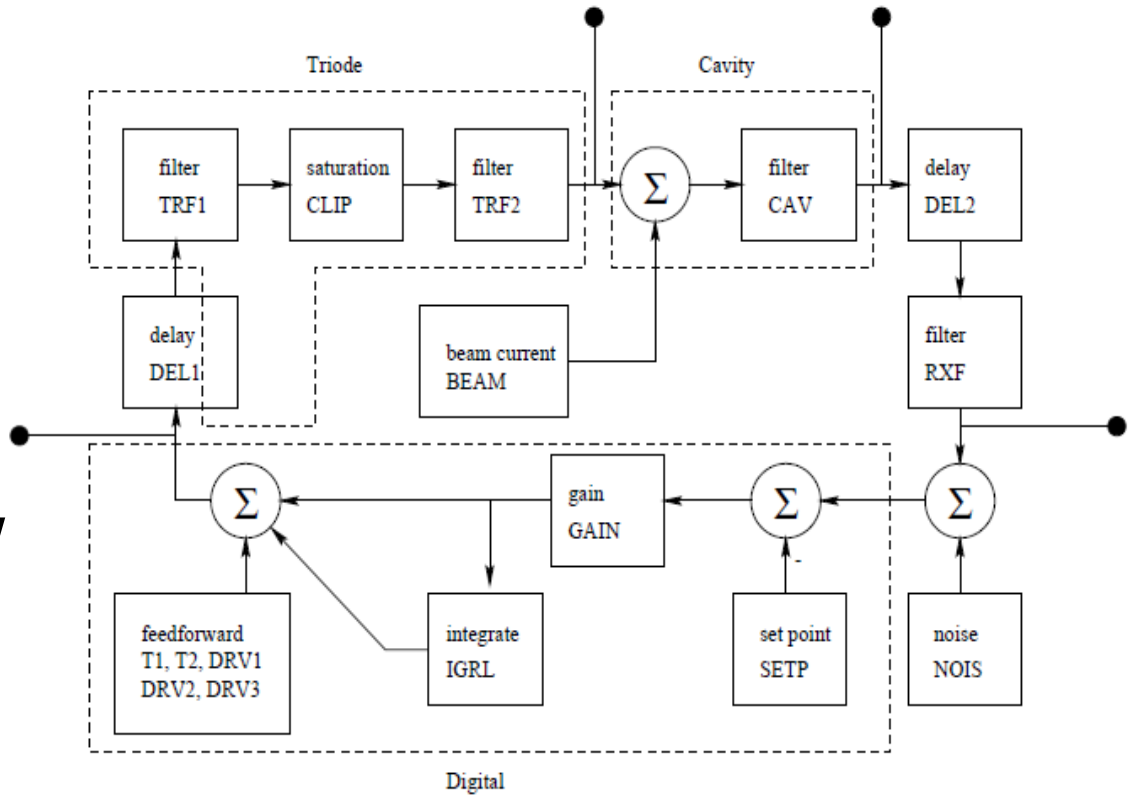

References: **http://recycle.lbl.gov/~ldoolitt/llrf-model/**

RF System Models: DESY

- Matlab/Simulink based
- Cavity represented in state space
- A library of model blocks is available

Feedback/Feedforward

Lorentz Force

GDR and SEL

Various other algorithms (Kalman, Smith Predictor)

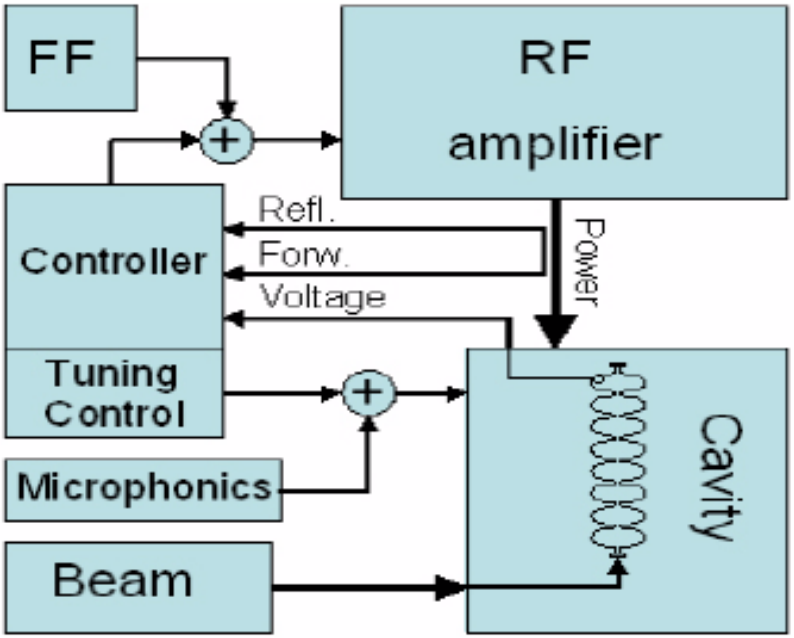

$$\begin{bmatrix} \dot{v}_r \\ \dot{v}_i \end{bmatrix} = \begin{bmatrix} -\omega_{12} & -\Delta\omega \\ \Delta\omega & -\omega_{12} \end{bmatrix} \cdot \begin{bmatrix} v_r \\ v_i \end{bmatrix} + R \cdot \omega_{12} \cdot \begin{bmatrix} 1 & 0 \\ 0 & 1 \end{bmatrix} \cdot \begin{bmatrix} I_r \\ I_i \end{bmatrix}$$

References: 32

RF System Models: JLAB

Cavity representation is simplified to quadrature components using low pass filter (cavity bandwidth/2).

- Lorentz Force detuning, microphonics and tuners function are incorporated as a frequency modulators.

Baseband simulation, means sampling time for processing can be large (1usec) thus simulation speed is high.

- Rotation matrix for quadrature components to reflect detuning frequency
- Microphonics: External noise generator

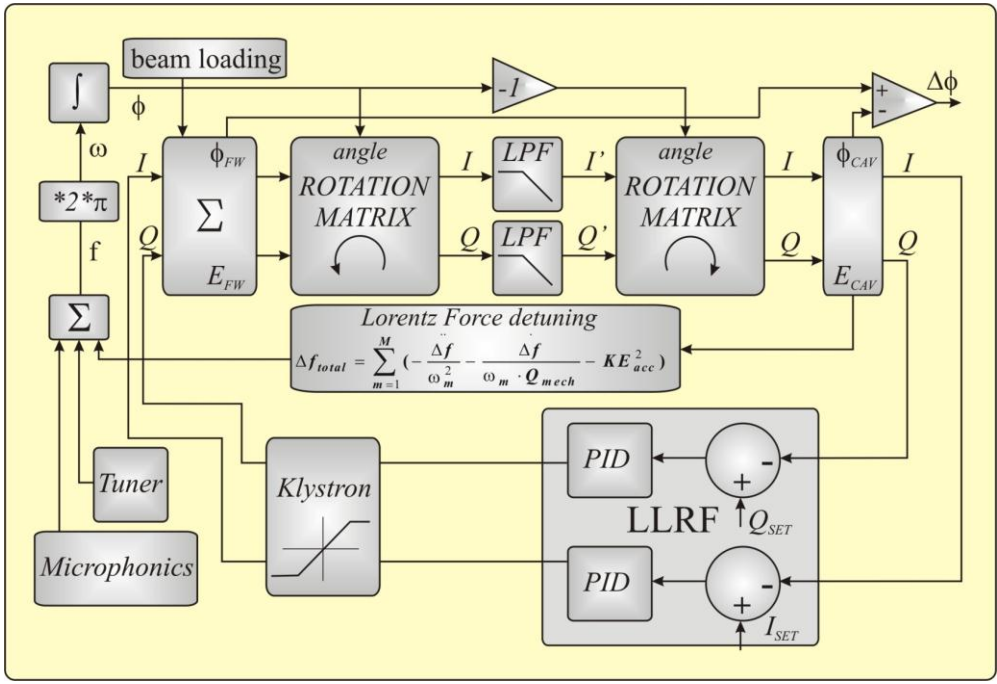

References: 29

Cavity Control Algorithms

Generator Driven Resonator (GDR)

- Vector Sum (Flash ….ILC)
- Feed forward (for pulsed systems)

Self Excited Loop (SEL)

- Microphonics (detuning) compensator

Other Control Algorithms

- Kalman Filter
- Adaptive Control (LMS)

Generator Driven Resonator

- Essentially an extension of the classic "Controller – Plant" model
- Easily adaptable to I and Q domain for digital control.

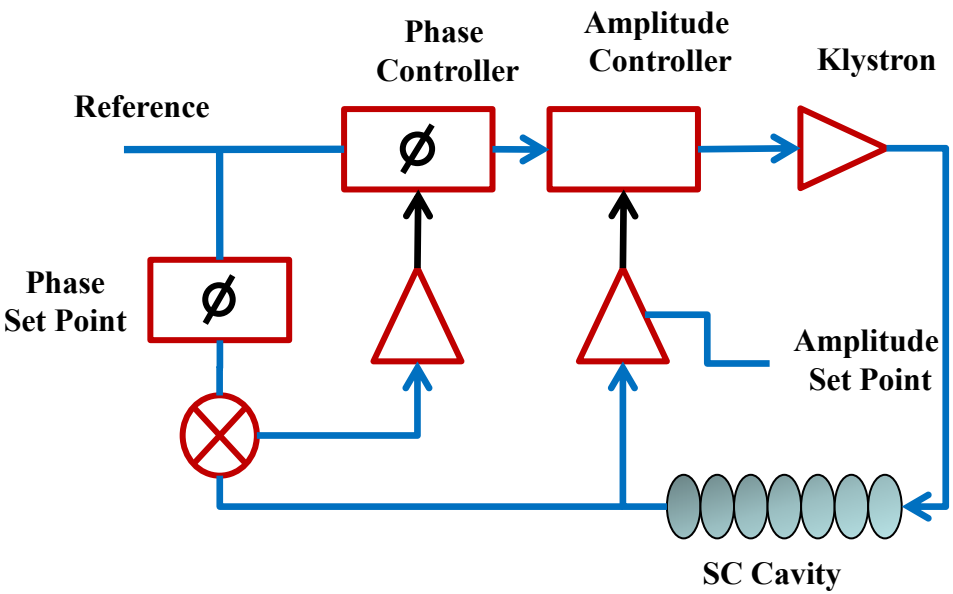

Advantages

- Where fast/deterministic lock up times are critical i.e pulsed systems.

Disadvantages

- Not frequency agile needs tuning elements to keep cavity close to reference
- High Q machines with high microphonic content and large Lorentz detuning could go unstable

References: 30

Self Excited Loop (SEL)

Cavity acts as a "tank" circuit for the feedback. Much like a VCO in a PLL.

By adjusting loop phase, loop is forced to operate at the reference frequency.

"No free lunch" cavity still must be locked close to the reference to avoid saturating the power amplifier

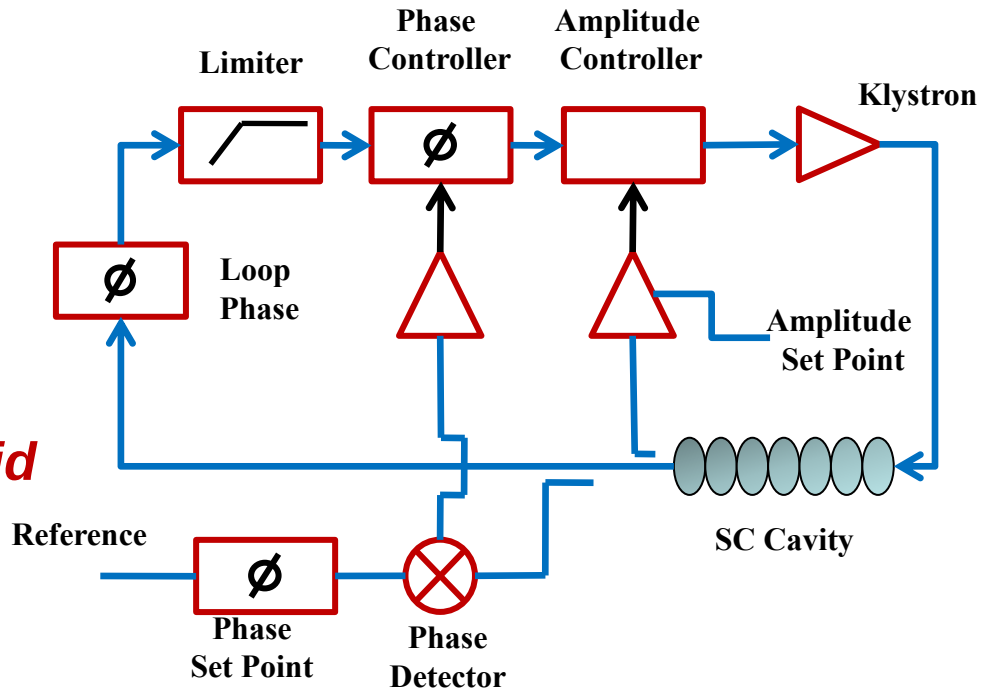

<u>Advantages</u>

- **High Q_L Cavities**
- **Systems with large Lorentz detuning**

<u>Disadvantages</u>

- **Slow lock up time**

References: 30

GDR vs. Digital SEL

- When "locked " the methods are equivalent.

- GDR only operates in the "DC" domain i.e. the converted vector does not spin only has angle and magnitude dependence.
- A digital SEL must be able to handle a spinning vector when the system is not locked i.e. there is an "ωt" term that must be accounted for when the SEL is in oscillation mode.

- DSEL capture range only limited by digital filter (~ 100 kHz)
- Easy configuration switch between GDR and SEL

Ultimately some hybrid digital SEL/GDR of the two may be the solution.

Analog RF Systems

- The standard method for RF control up until ~ 1995
- Still have relevance in accelerators that need little adjustment

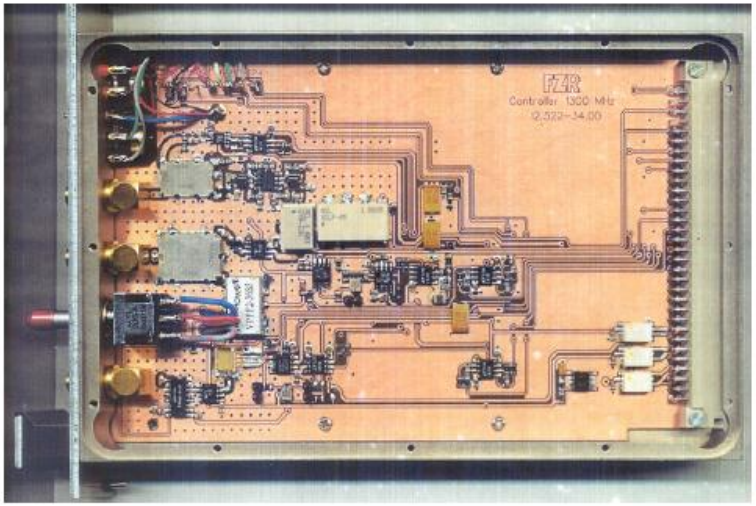

<u>Advantages</u>

- Economical
- Simple design

<u>Disadvantages</u>

- flexibility
- Pulsed beam loading
- RF/analog signal processing parts harder to find

Recent Installations

Daresbury, ELBE/Rossendorf

Digital RF Systems

- Overwhelmingly the majority of new RF controls employ digital feedback

SNS RF Controls

Advantages

- Flexibility
- Flexibility
- ……did I mention flexibility??

Disadvantages

- Complexity……this is relative

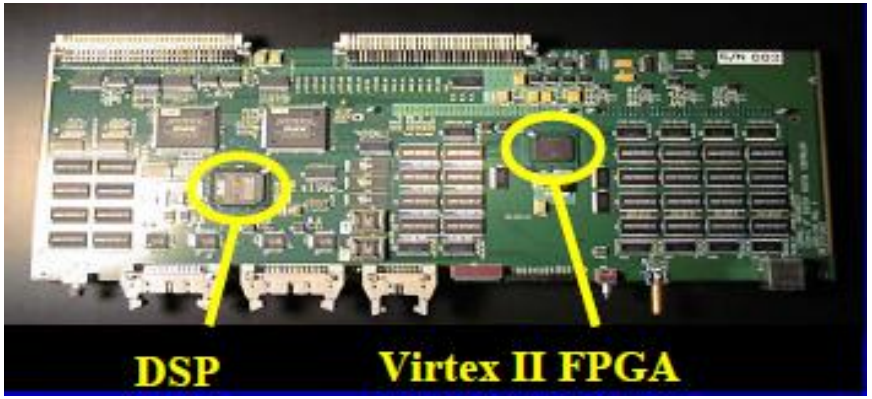

Cornel RF Controls

Installations too numerous to list

JLAB Upgrade RF Control System

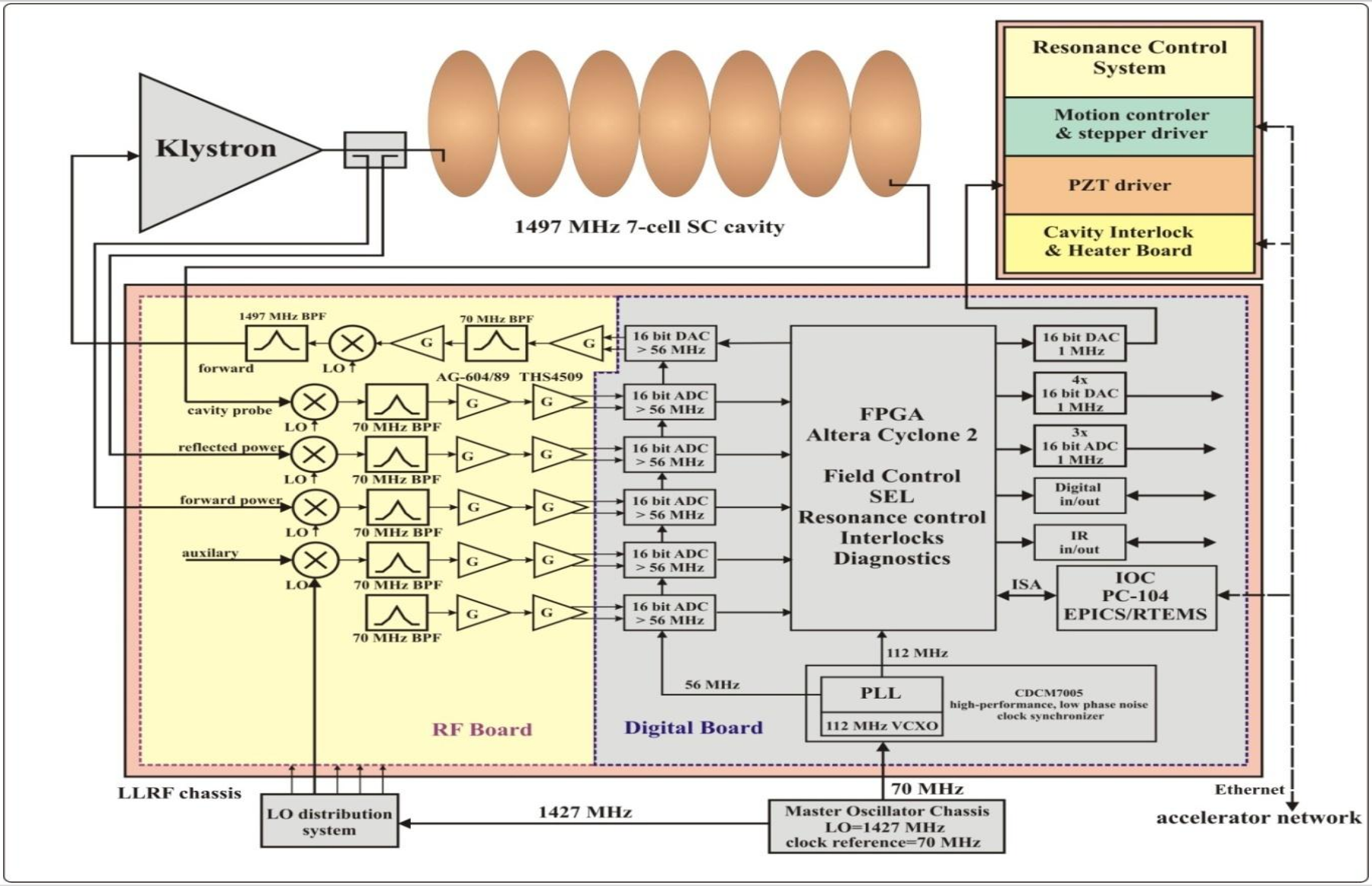

JLAB LLRF System Architecture

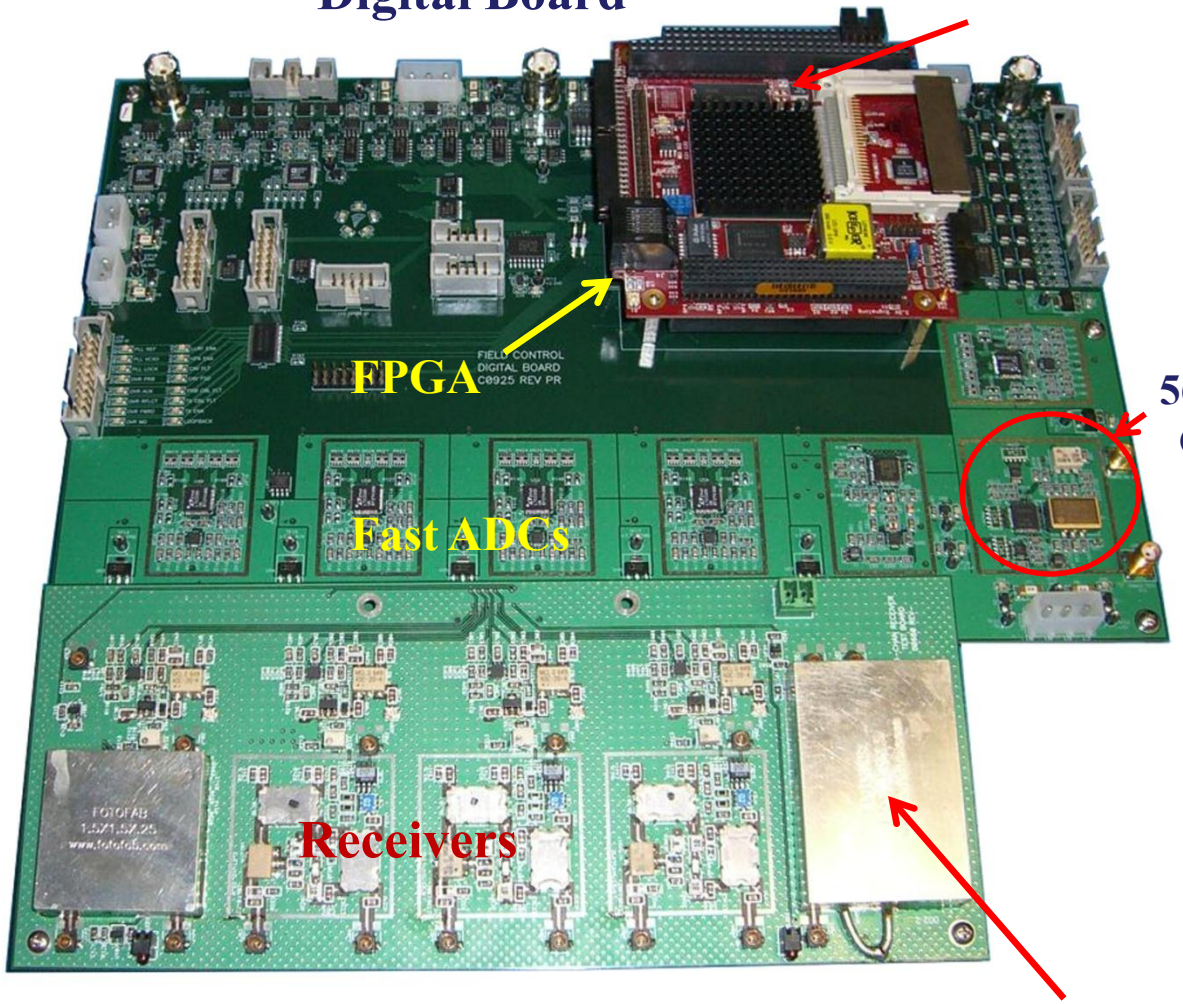

- **RF Board**

  RF = 1497 MHz, IF = 70 MHz
  5 Receiver Channels
  One transmitter

- **Digital Board**

  FPGA: Altera Cyclone 2 EP2C35
  16 bit ADC's & DAC
  Quadrature sampling at 56 MHz
  Ultra low noise 56 MHz clock
  IOC PC104/ RTEMS/EPICS

Receiver Basics

- Heterodyne scheme
- Noise Figure: Typically large cavity signal so not an issue
- Signal to Noise Ratio (S/R, SNR): Ultimately determines field control. Dominated by ADC
- Component linearity effects dynamic range and signal accuracy
- Clock and LO Phase Noise/Jitter can impact control

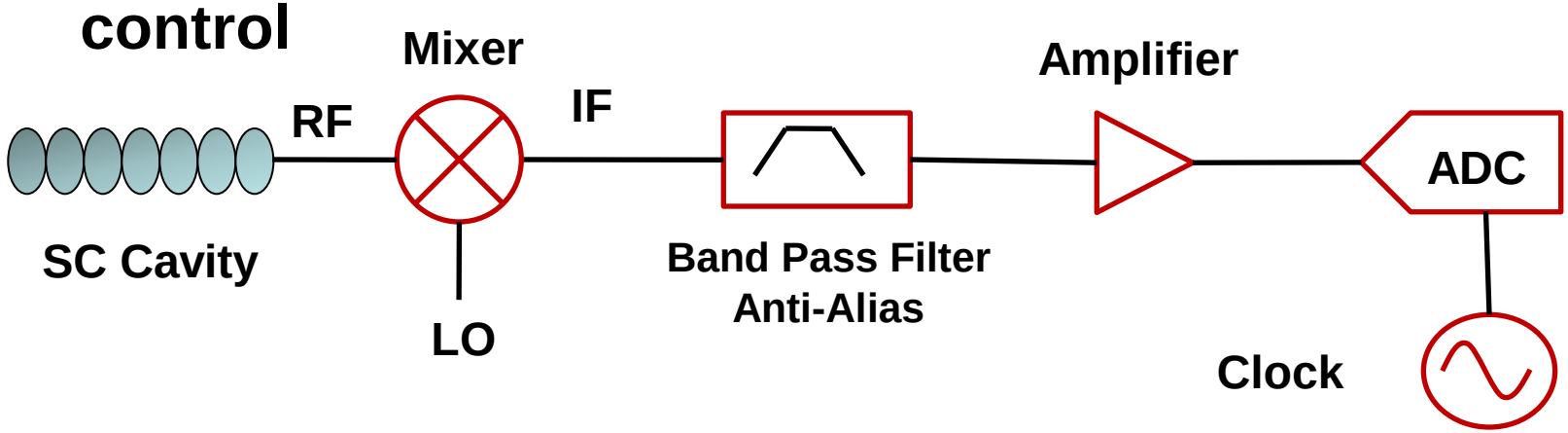

Building a LLRF System Receiver Section

- **Errors in the receiver chain are driven into the cavity by feedback gain in the controller**
  - **Quantization noise in the ADCs**
  - **Harmonic distortion aliased back into the passband**
  - **Quantization error**
  - **Channel to channel crosstalk**
  - **Nonlinearities in the down converter**

You can't recover from a bad receiver design!

B. Chase SRF 2011

Frequency Mixer (Ideal)

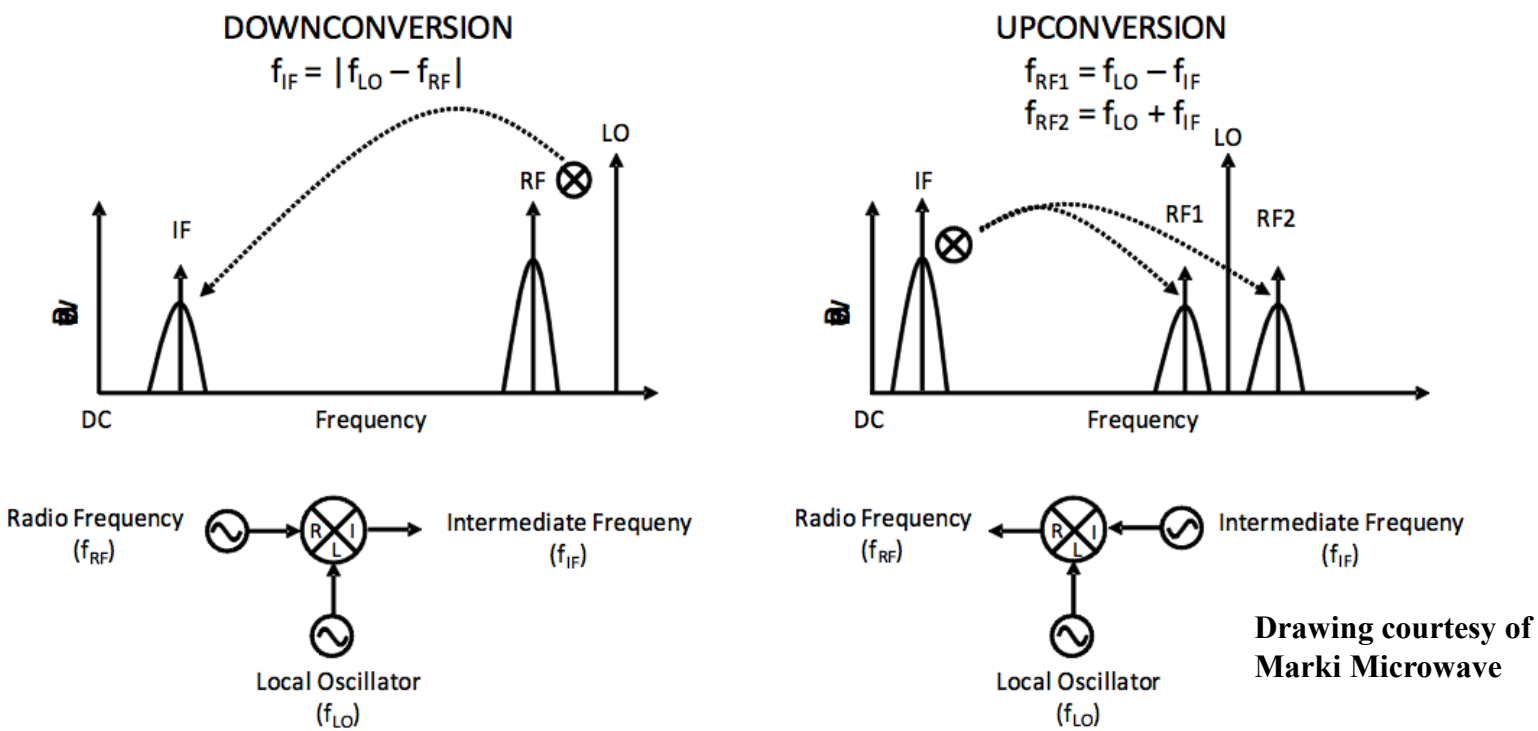

Drawing courtesy of Marki Microwave

$$y_{IF}(t) = y_{RF}(t) \times y_{LO}(t) \qquad y_{RF}(t) = y_{IF}(t) \times y_{LO}(t)$$

Down conversion conserves phase, thus lowering jitter sensitivity by: $\frac{f_{IF}}{f_{RF}}$

B. Chase SRF 2011

Frequency Mixer (real)

- Mixers are based on diodes which are the nonlinear devices used for current switching
  - This process generates unwanted harmonics
  - Diodes are not perfect switches and distort the IF signal producing harmonics

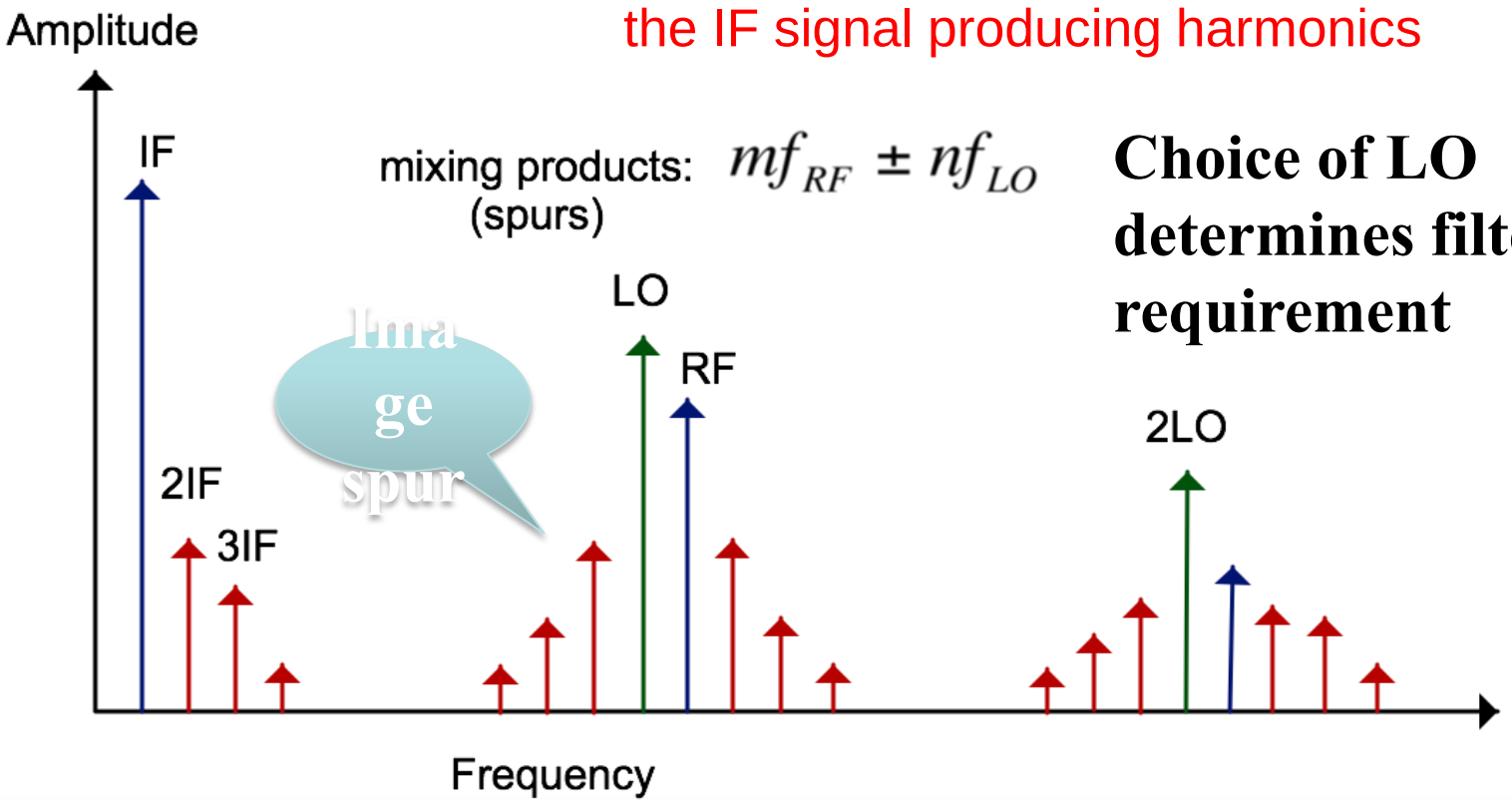

Choice of LO determines filter requirement

Direct Sampling

- Should be considered for frequencies < 500 MHz
- Clock jitter/phase noise is crucial
- ADC must have small aperture jitter (< 300 fs)

Benefits

- Economy …. $$$
- Simpler receiver for multiple frequencies
- Simpler Master Oscillator (MO) distribution

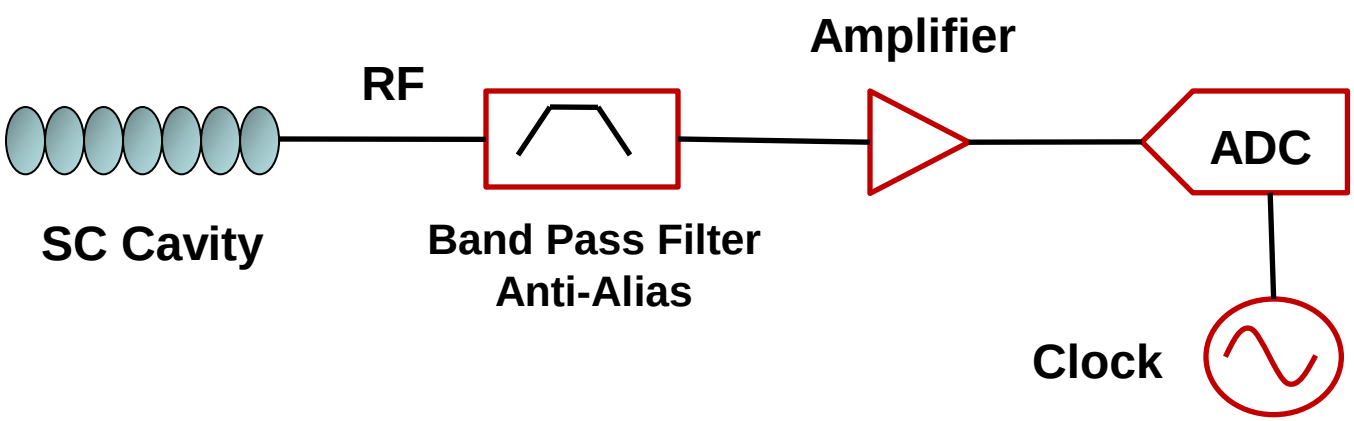

Detection process IF signal mixed down to baseband (zero Hertz)

- Loop controller processing is usually done at baseband as these signals are needed for diagnostics
- Most modern SCRF LLRF systems digitize RF or IF signals and frequency translates them to baseband with Digital Down Converters (DDC) built with Numeric Controlled Oscillators
  - Other options are direct conversion or direct IQ conversion

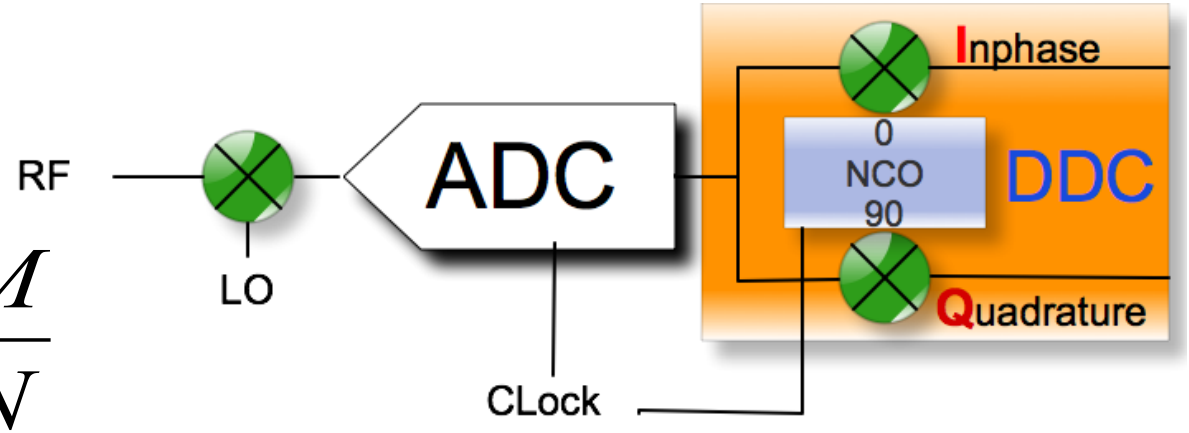

$$f_s = F_{if} \frac{M}{N}$$

IF M/N is rational, the NCO table can be small

If M/N = 4 then the phase step is 90 degrees ("IQ" sampling)

Quadrature Sampling

- Sample a frequency at four points
- Can either harmonic sample or sub harmonic
- Example: A signal at 50 MHz.
  - Harmonic Sampling frequency is 200 MHz
  - Sub harmonic Sampling or 40 MHz (200/5)
- Easier to sample at lower frequencies

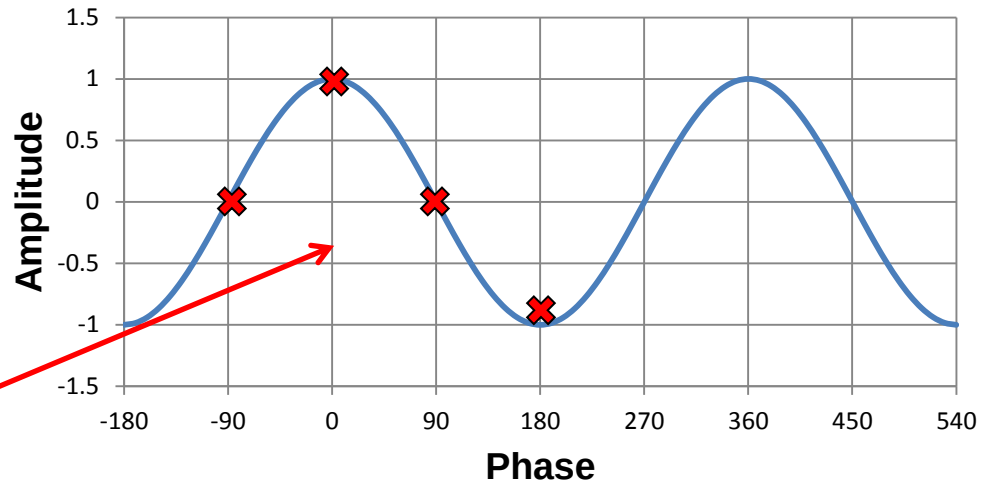

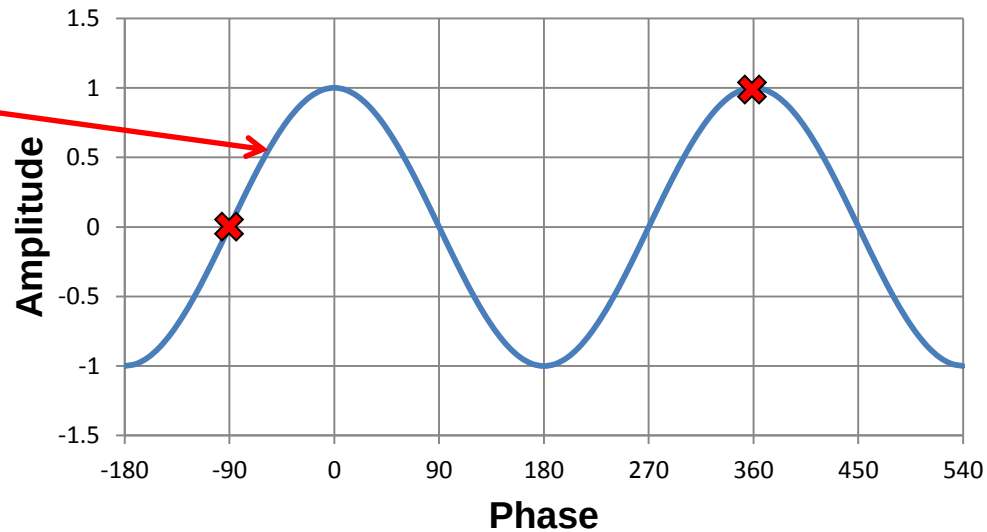

ADC Selection

- Factors in heavily in determining your systems S/N and dynamic range
- Calculate how many bits that you need then add two!
  - Additional Cost will be minimal
- S/N determined by , number of bits, quantization error, sample rate and system jitter.

Parallel Architecture clock speed > 50 MHz

- Advantage: Wide bandwidths > 700 MHz

Serial Architecture clock speeds < 50 MHz

- Advantage: multiple channels, less pins needed, smaller FPGA

ADC Selection cont.

Whether you are down converting to an IF or Direct sampling the systems S/N needs to be determined to meet field control specifications.

The S/N of an ideal ADC is given by the following equation

$$S / N = [6.02N + 1.76]$$

Number of bits	12	14	16
S/N (ideal) dB	74	86	98
S/N (real) dB	70	74	78

- ***S/N determines the lower limits of the field control you can expect….a light source would need more bits …***

ADC – S/N

When we factor in linearity and clock jitter the S/N decreases even more. In the case of clock jitter, the conversion error can be seen below

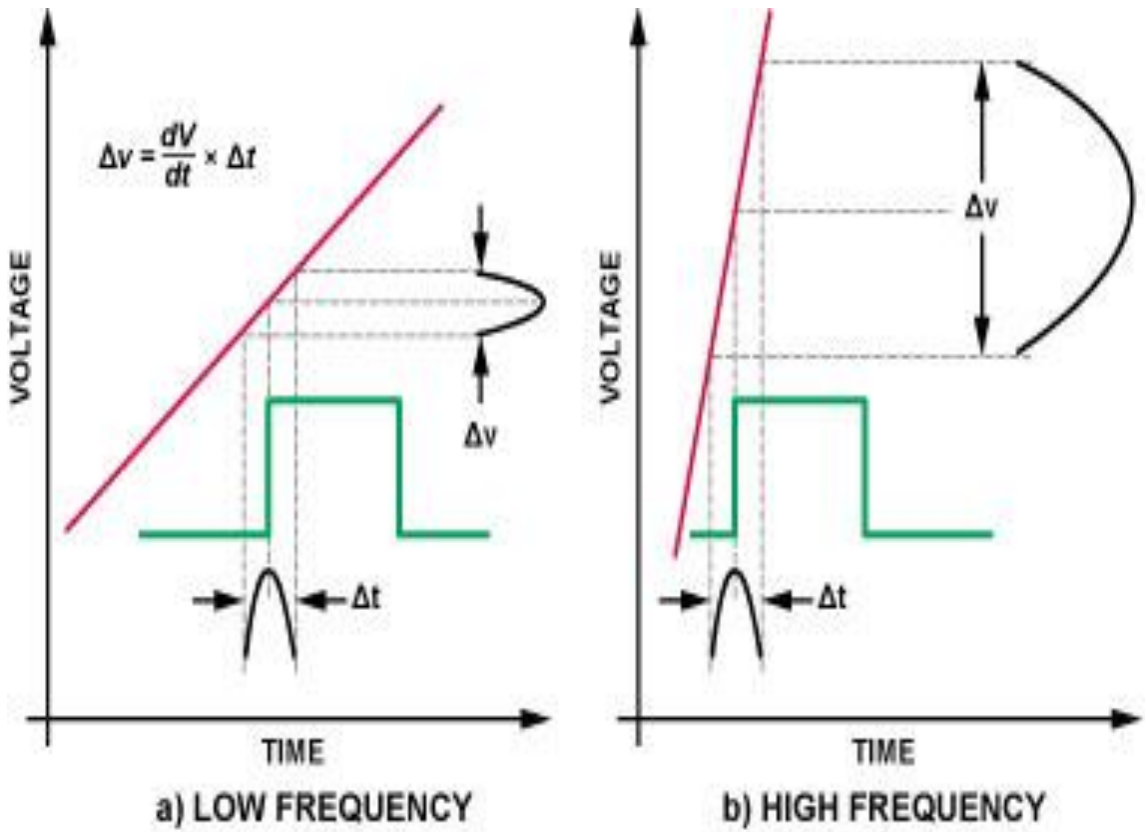

References: 26

ADC – S/N

Real world S/N equation

$$S/N = -20\log 10\sqrt{(\omega_o t_{jrms})^2 + \frac{2}{3}\left(\frac{1+\varepsilon}{2^N}\right)^2 + \left(\frac{2\sqrt{2}V_{NOISErms}}{2^N}\right)^2}$$

Where ω_o is the analog input frequency ($2\pi f$),

t_{jrms} is the combined jitter of the ADC and clock,

ε is the average differential nonlinearity (DNL) of the ADC in LSBs,

$V_{NOISErms}$ is the effective input noise of the ADC in LSBs and

N is the number of ADC bits.

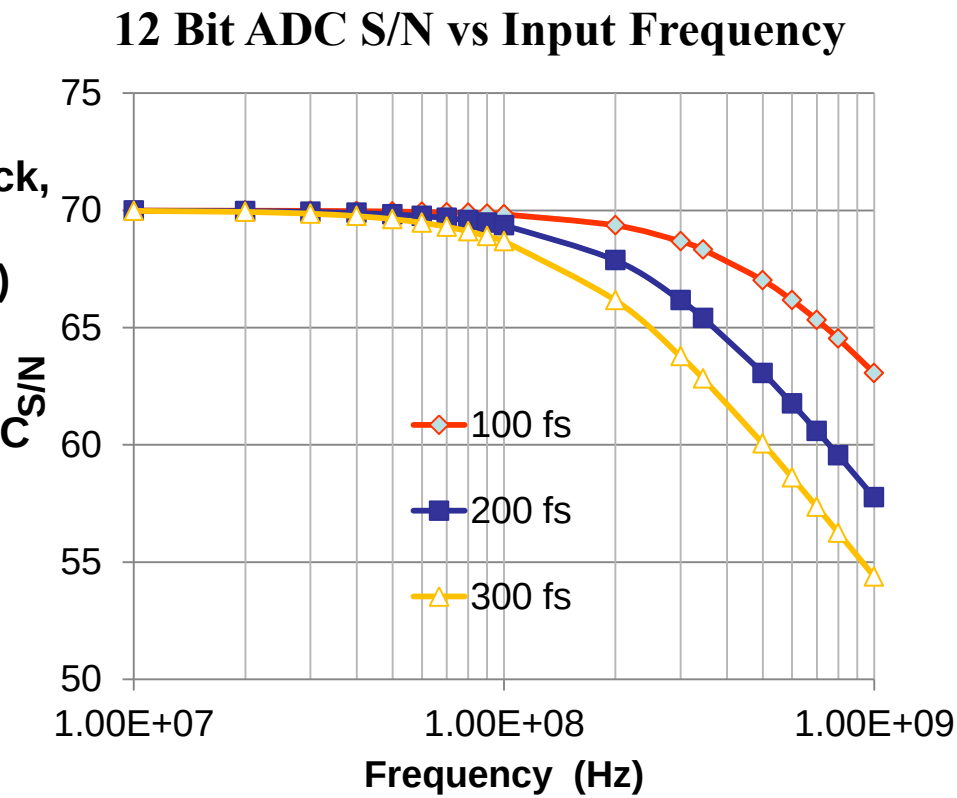

References: 26

Phase Noise and Timing Jitter

- **Phase Noise** is the parameter used in the communication industry to define an oscillators spectral purity.
- **Timing Jitter** is the parameter most used by accelerator designers in describing beam based specifications and phenomena.
- Phase noise spectrum can be converted to a timing jitter using the formula

$$\tau = \frac{\sqrt{2 \cdot 10^{A/10}}}{2\pi f_O}$$

Where A is the area under the curve

References: 22, 23, 24

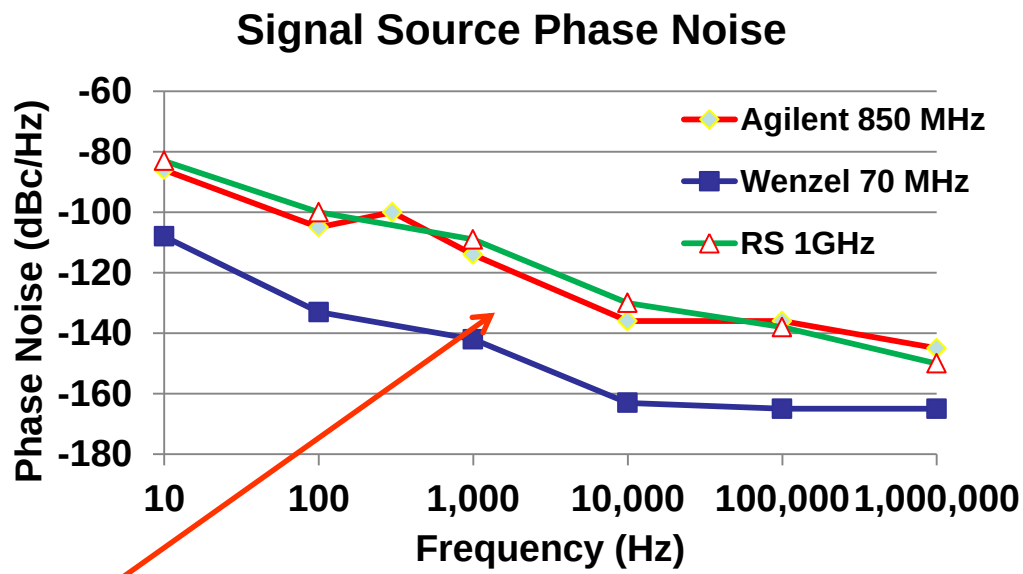

Table: Signal Source Jitter

Signal Source	Integrated Phase Noise (dBc/MHz)	Jitter (RMS)
Agilent(1497 MHz)	-67.5	63 fs
Rhode Schwarz(1497 MHz)	-64.0	76 fs
Wenzel (70 MHz)	-97.1	45 fs

JLAB Upgrade RF Receiver

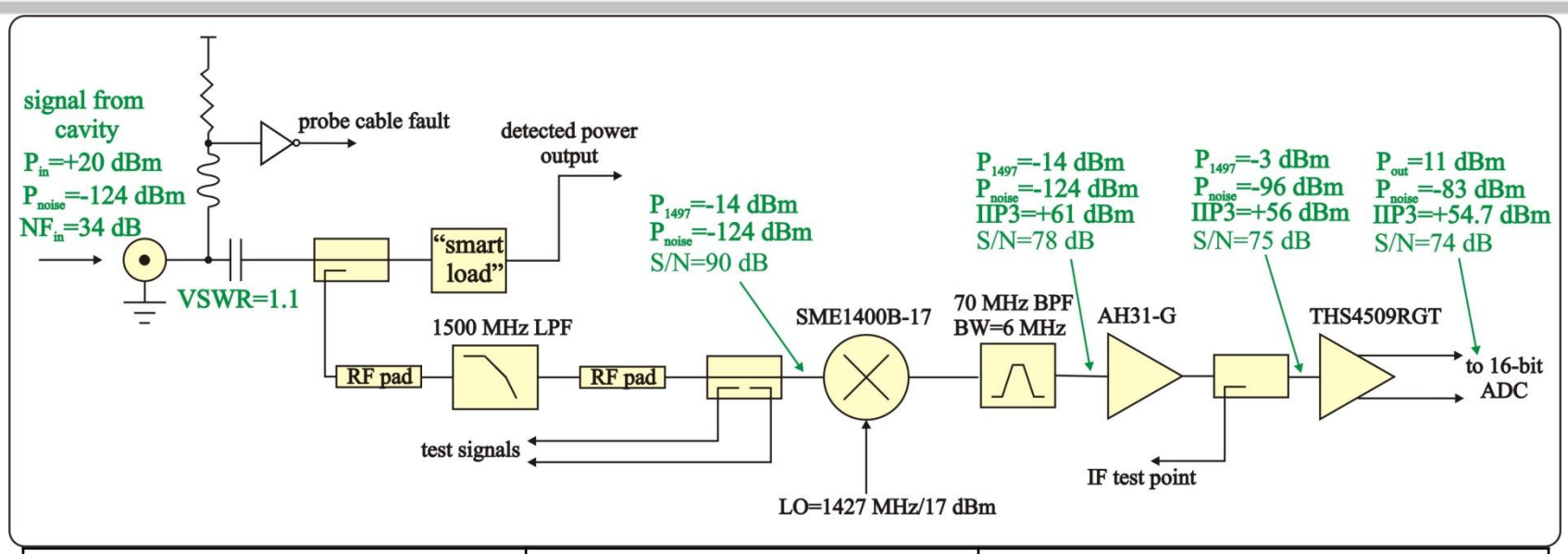

Parameter	Specification Value	Imposing Quantities
S/N	72 dB	0.1 degree resolution, 0.01% gradient accuracy
Bandwidth	8 MHz	Latency, S/N, temperature stability
Latency	100 ns	Control BW
Noise Figure (NF)	52 dB, BW = 100 kHz	S/N for phase resolution
Linearity	0.01% F.S.	Stability, accuracy
Dynamic Range	+54 dBm IIP3	Gradient range
Channel Isolation	67 dB	Phase, gradient resolution/accuracy
In-band intermodulation distortion (IMD)	67 dBc	THD

Field Control: Amplitude

Receiver S/N determines minimum residual amplitude control

- **Amplifiers**
- **Mixer**
- **ADC**

- **Linear components needed for stability and accuracy over large dynamic range**

It is possible to improve S/N, through process gain, but at the expense of control bandwidth and ultimately stability (latency).

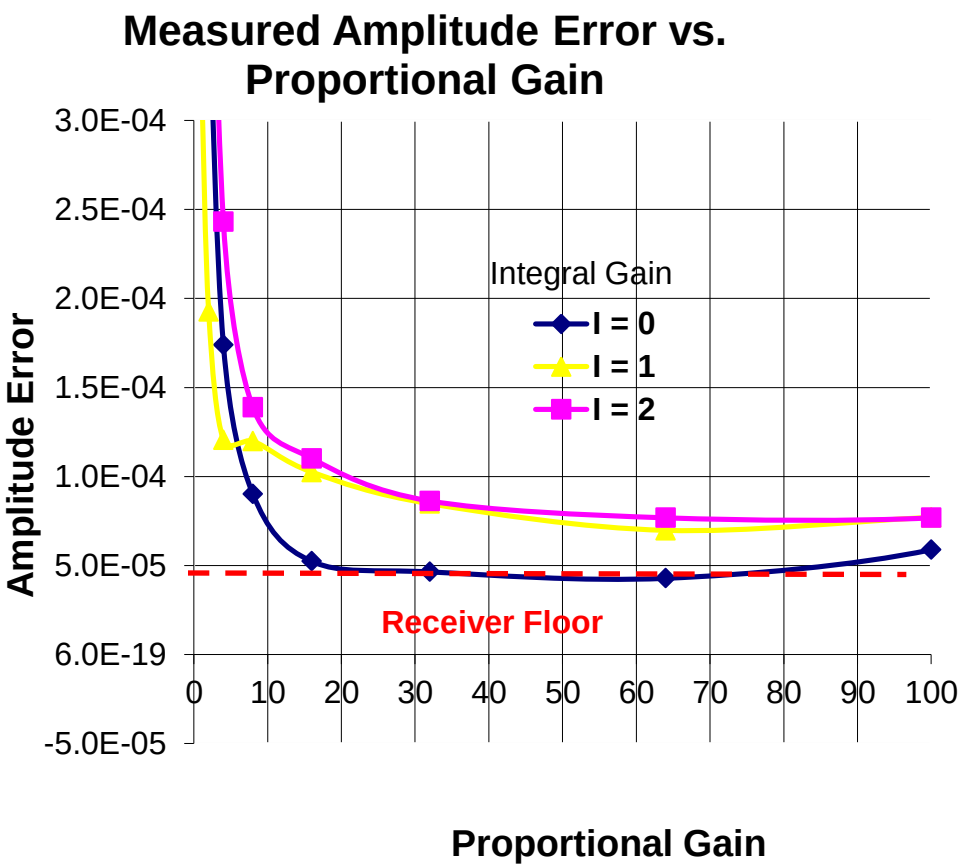

RF=1497 MHz
IF = 70 MHz
ADC = 14 bits

References: 30

Field Control: Phase

- Highly dependent on the reference (LO/IF) and subsequent board level clock
- Linear components needed to minimize AM to PM contributions
- ADC aperture jitter ~ 100 fs
- Some ADC linearity can be improved with near quadrature sampling

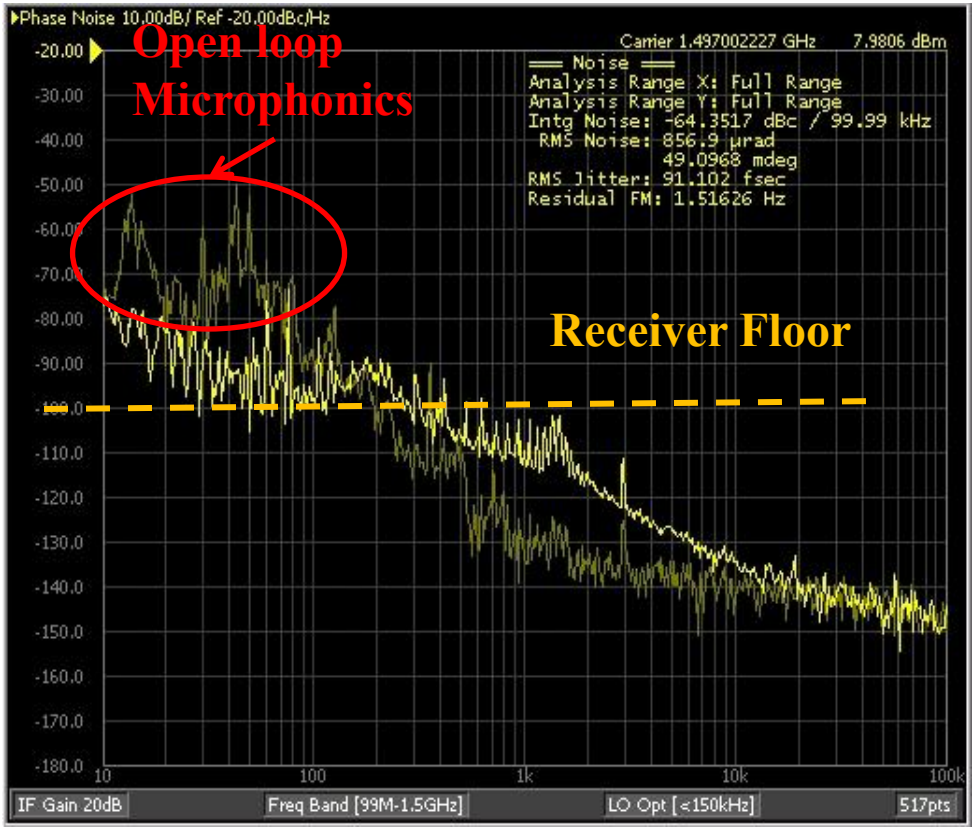

Phase Noise of Open and Closed Loop. Bright Yellow is Closed loop.

References: 30

Digital Signal Processing

FPGA or DSP?

- For fast processing Field Programmable Gate Array (FPGA) wins
- DSP a little more flexible but FPGAs not far behind
- Suggest FPGA followed by a small CPU (ColdFire or PC104) of some sort (best of both worlds!)
- For FPGA calculate your gate needs then double or triple the size to be safe. *Cost is a wash.*

FPGA: Xlinx … Altera …. Both are used by the accelerator community

DSP: Texas Instruments …Analog Devices dominate industry

Digital Signal Processing

- I /Q easiest to implement
- Non I/Q sampling eliminates ADC non-linearities
- Frontend processing can be decimation followed by FIR …….not efficient
- Better method is to use a Cascaded-Integrated-Comb (CIC).

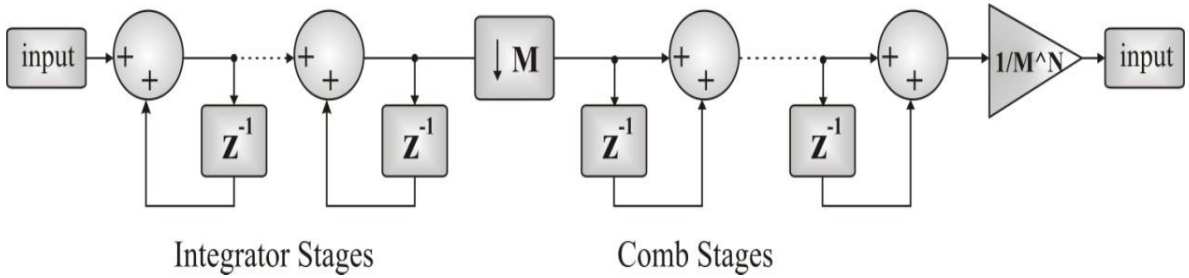

N-stage cascaded integrator-comb (CIC) filter (decimator)

- PID algorithm simplest for CW applications
- PID can be enhanced with feed-forward or gain scheduling for use in pulsed systems.

Digital Signal Processing

- **IIR Filter: Best for realizing analog filters**
  - **Need to decimate to Fs/Fo of ~ 100 to insure stability**
  - **Can have high-gain and round off errors**

- **Oversampling can improve S/N by ~20log($N^{1/2}$), but at the expense of control bandwidth**

Example:

clock = 50 MHz and bandwidth needed is 1 MHz. The potential S/N improvement would be 17 dB

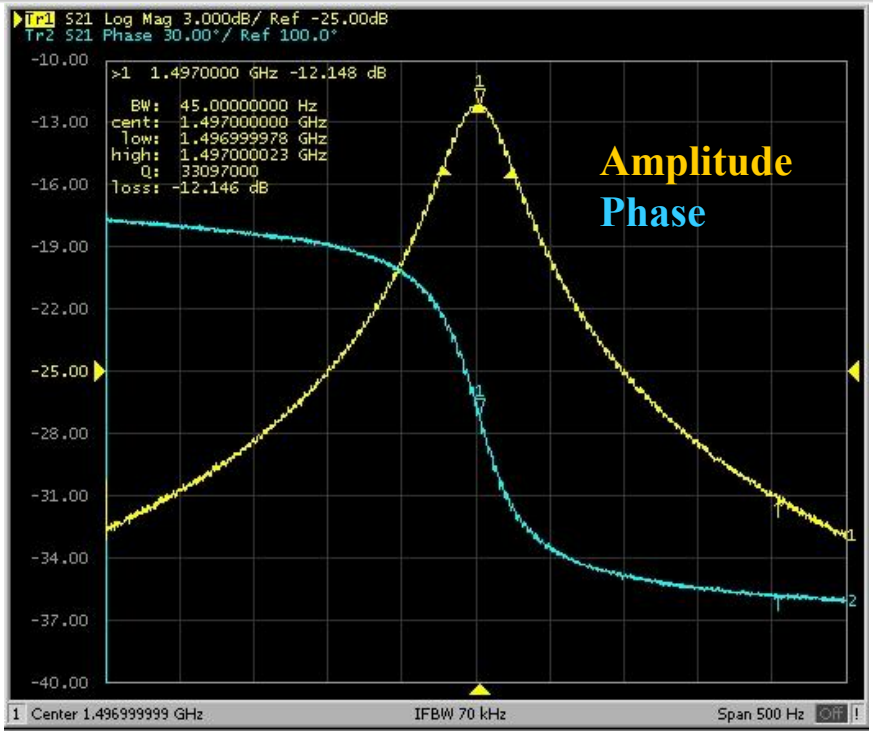

Cavity Emulator using IIR Filter

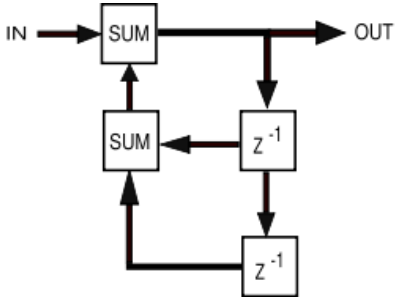

References: 30

Signal Processing Block Diagram: GDR

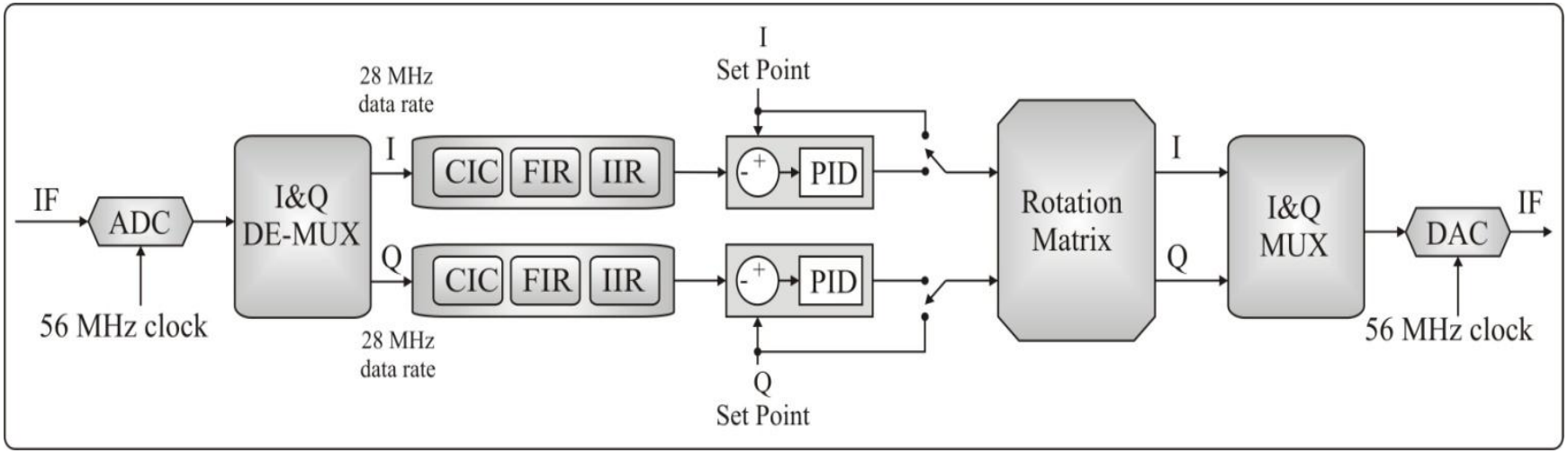

- **IF direct I&Q sampling**
- **Digital filtering**
- **PID controller for I and Q values**
- **Rotation matrix**
- **Single DAC generating IF signal**

References: 31

Signal Processing Block Diagram: SEL

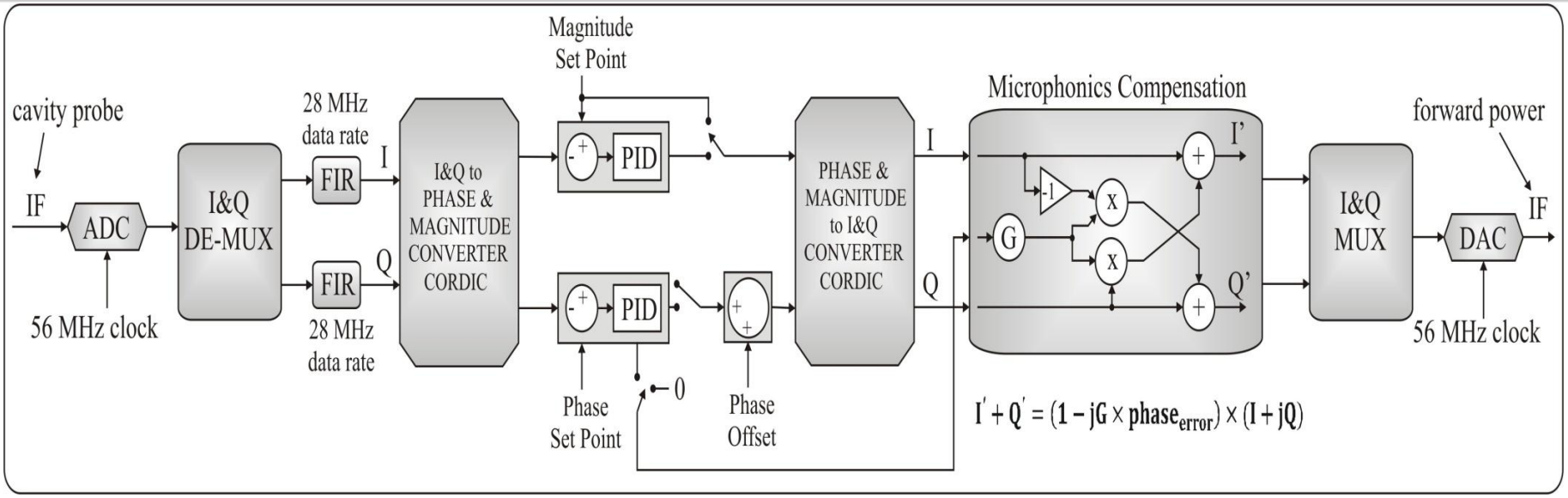

- **IF direct I&Q sampling**
- **digital filtering**
- **I&Q to Phase&Magnitude - COordinate Rotation DIgital Computer (CORDIC)**
- **SEL mode**
- **Microphonics Compensation**
- **single DAC generating IF signal**

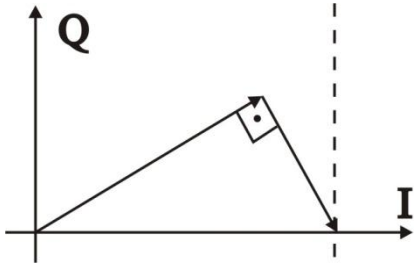

References: 31

CORDIC Algorithm

- COordinate Rotation DIgital Computer
- Iterative method for determining magnitude and phase angle
  - **Avoids multiplication and division**
- N_{bits}+1 clock cycles per sample
- Can also be used for vectoring and linear functions (eg. y = mx + b)
- Exploits the similarity between 45°, 22.5°, 11.125°, etc. and Arctan of 0.5, 0.25, 0.125, etc.
- **Multiplies are reduced to shift-and-add operations**

Angle	Tan ( )	Nearest 2^{-N}	Atan ( )
45	1.0	1	45
22.5	0.414	0.5	26.6
11.25	0.199	0.25	14.04
5.625	0.095	0.125	7.13
2.8125	0.049	0.0625	3.58
1.406125	0.0246	0.03125	1.79
0.703125	0.0123	0.01563	0.90

$$[x', y'] = [x, y] \cdot \begin{bmatrix} \cos\theta & \sin\theta \\ -\sin\theta & \cos\theta \end{bmatrix}$$

$$x_{i+1} = K_i \left[x_i - y_i \cdot d_i \cdot 2^{-i} \right]$$
$$y_{i+1} = K_i \left[y_i + x_i \cdot d_i \cdot 2^{-i} \right]$$

References: 33, 34

Transmitter/Up Conversion

- DAC typically the same number of bits as the ADC
- DAC needs to be fast enough to support IF generation or RF Conversion if Direct Sampling
- Mixer specification (notably IP3) can be relaxed from cavity mixer.
- Depending on pre-amp (solid state) and power amplifier (Klystron/IOT), you may need to filter out LO.

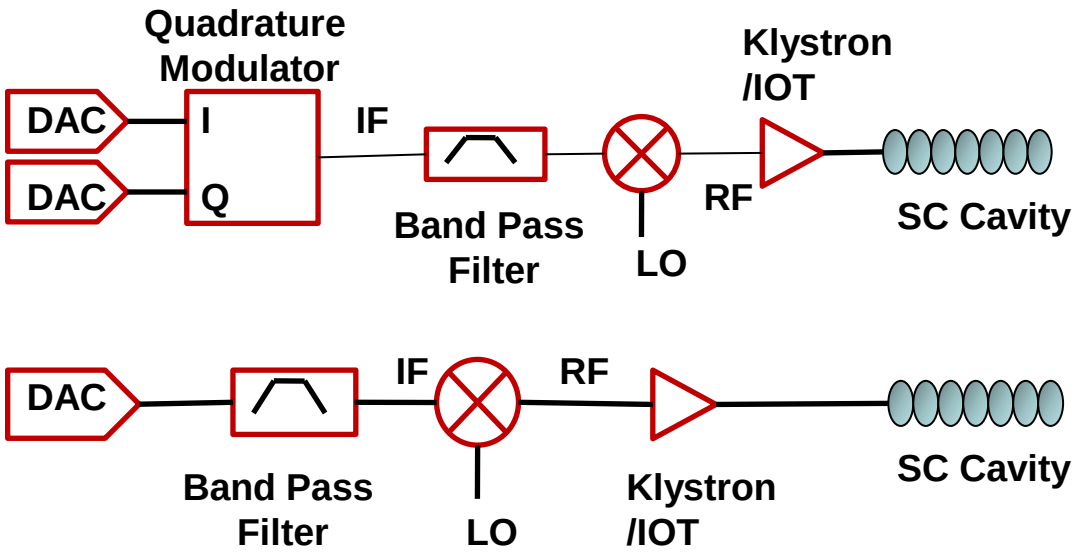

Direct Digital IF Signal Generation

Single DAC can eliminate Quadrature Modulator
See Larry Doolittle web page: http://recycle.lbl.gov/~ldoolitt/plan50MHz/

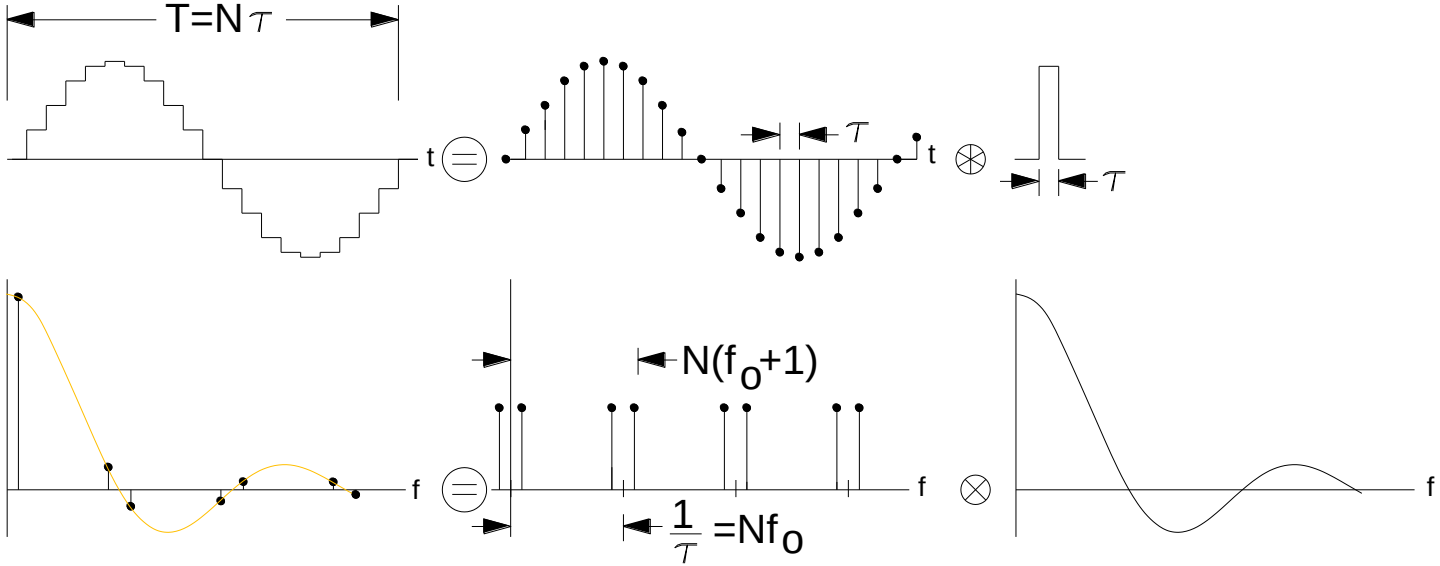

- Concept use one of the harmonics out of your ADC for your IF frequency.
- For a 10-X system two disadvantages to using second or third harmonic frequencies are:
  - Small signal content.
  - Analog filter requirements.

Direct Quadrature IF Up Conversion

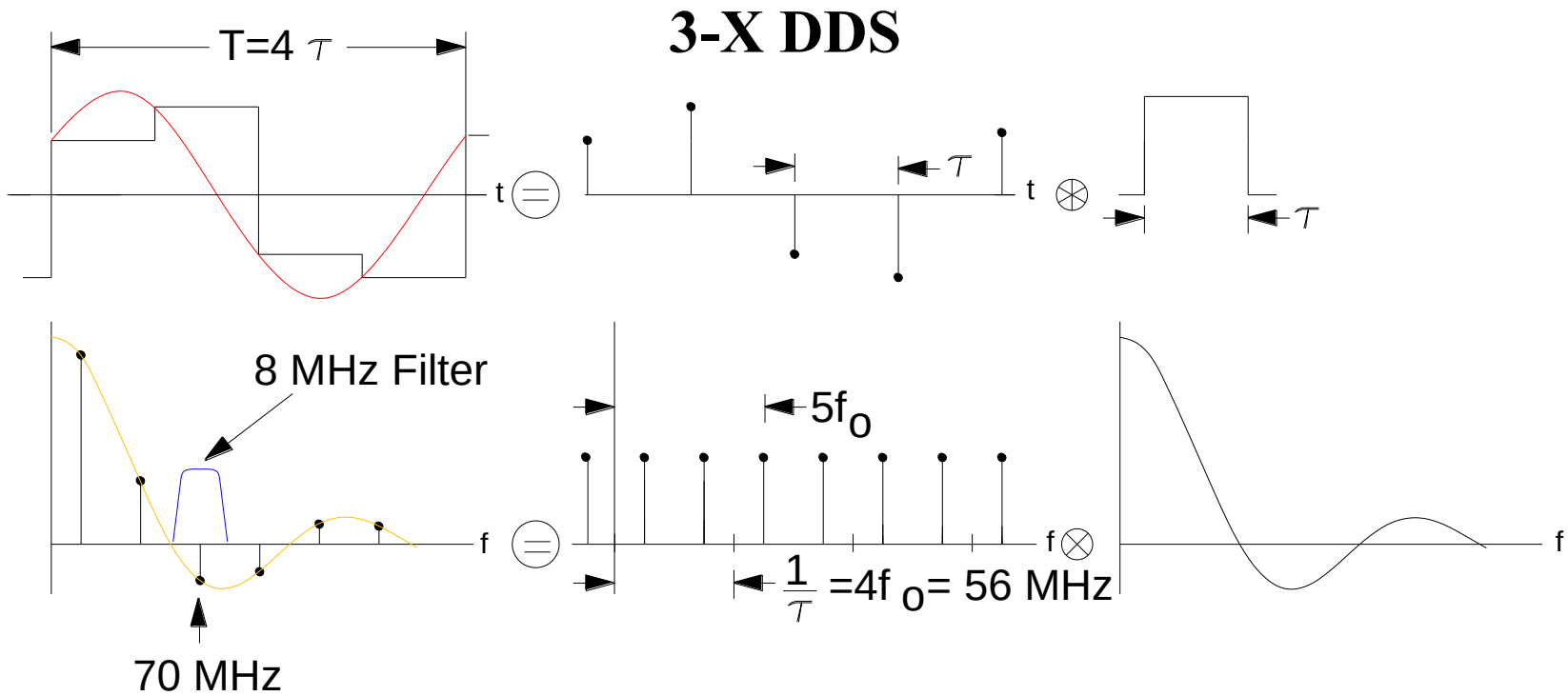

- **Ratios of f3 to f1 is 1:5.**
- **70 MHz component is 14 MHz away from nearest neighbor.**
- **Commercial drop in 8 MHz BW filter available for $30.**
- **One can show that the harmonic contains the proper phase signal and is:**

$$A\sin(2\pi f_0+\varphi) \Rightarrow B_k A\sin(2\pi(kf_S \pm f_0)t+\varphi) \text{ where } k=0,1,2\ldots$$

Cavity Resonance Control

Goals of a resonance control system

- Keep the cavity as close as possible to the reference frequency, ultimately minimizing forward power.
- Compensates for Lorentz detuning for pulsed systems
- Minimize microphonics to assist electronic feedback
- **Reliable and maintainable**

Tuning Methods

- Stepper Motor: speed < 1 Hz
- Piezo tuner: speed > 1 Hz

References: 19

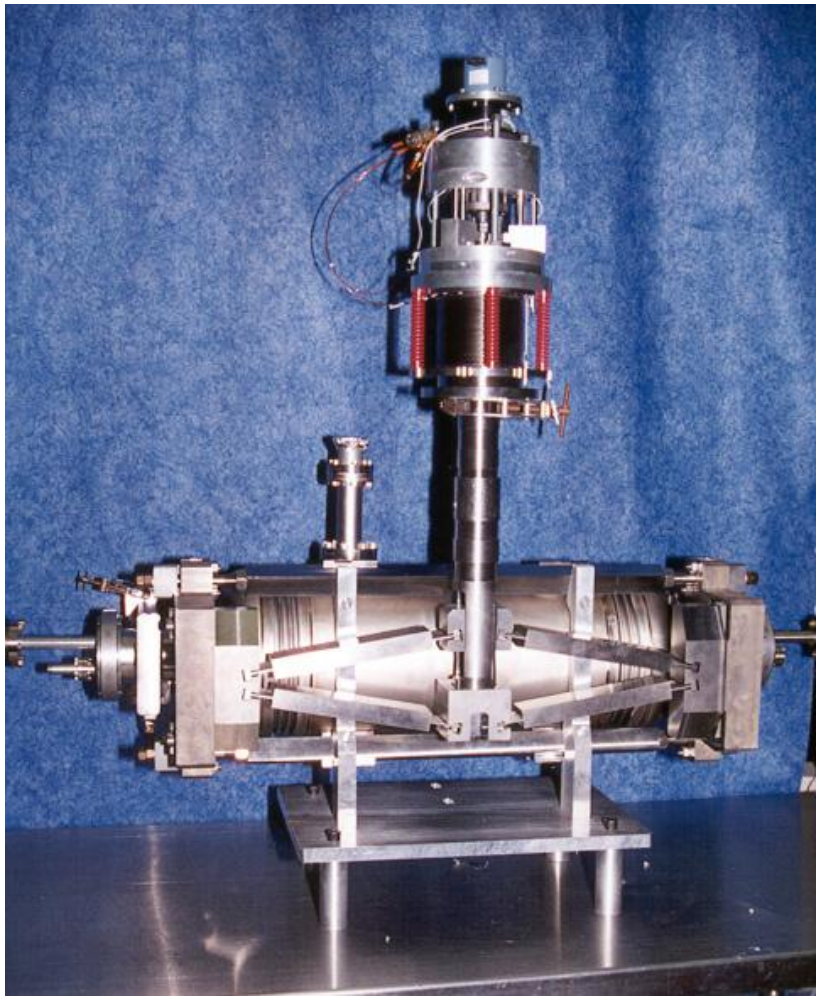

Prototype tuner for CEBAF Upgrade

Cavity Resonance Control Over 20 Years

- Example CEBAF (1986) to CEBAF Upgrade (2008)

	Frequency	Gradient	Bandwidth	Lorentz detuning	Range	Resolution	Tuning method	Drive
CEBAF	1497 MHz	5 MV/m	220 Hz	75 Hz	+/- 200 kHz	10 Hz	Ten/Comp	Stepper
CEBAF Upgrade	1497 MHz	20 MV/m	50 Hz	800 Hz (est.)	+/- 200 kHz	< 1Hz	Tension	Stepper & PZT

- ***Gradients increased five fold in 20 years bringing Lorentz detuning into play and the need to keep klystron size small.***
- ***Tuner designs responded with faster tuning methods (PZT) and increased resolution.***
- ***Future/Now: active mechanical compensation of microphonics***

References: 19

Coarse/Slow Tuner

Stepper Motor:

- Recover cavity from large excursions associated with down time activities or Cryogenic trips.
- Keeps the Fast Tuner centered
- Control can be slow < 1 sec

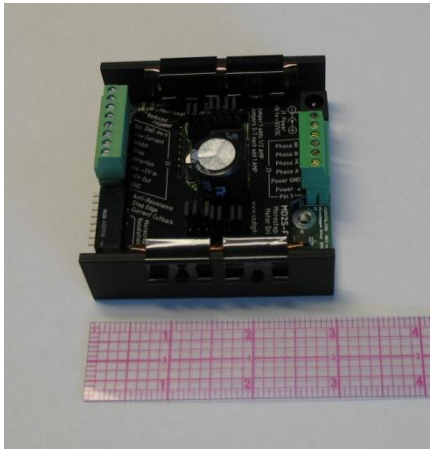

Stepper Motor Driver

Stepper motor

JLAB Upgrade Tuner assembly

Fine/Fast Tuner

Piezo-Electric Tuner (PZT):

- Large Industrial base for Piezo and electronics
- Recover or compensate for Lorentz Detuning (Feed Forward or Feedback)
- Minimizes small changes in resonance do to He pressure.
- Speed < 1 ms
- Control logic embedded in FPGA or fast DSP
- Warm Stroke greater than Cold Stroke

Has been demonstrated to minimize cavity microphonics

Upgrade Tuner for SL21 and FEL03 Cryomodules

- **Scissor jack mechanism**
  - Ti-6Al-4V Cold flexures & fulcrum bars
  - Cavity tuned in tension only
  - Attaches on hubs on cavity
- **Warm transmission**
  - Stepper motor, harmonic drive, piezo and ball screw mounted on top of CM
  - Openings required in shielding and vacuum tank
- **No bellows between cavities**
  - Need to accommodate thermal contraction of cavity string
  - Pre-load and offset each tuner while warm

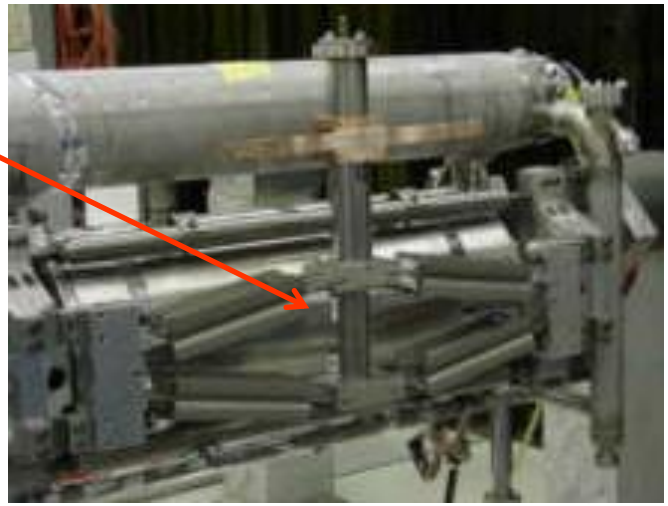

Evolution of the tuner!

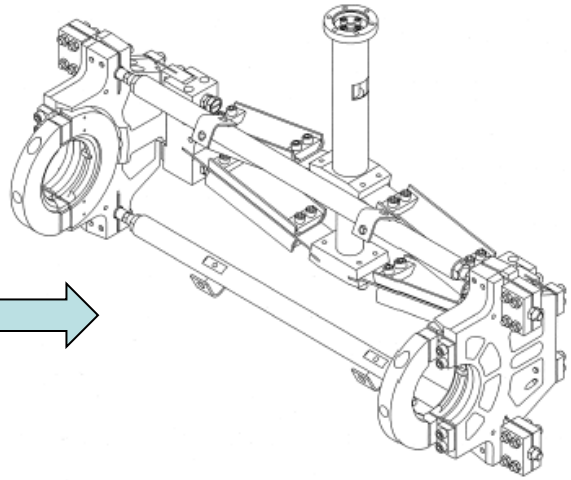

References: 19

Warm Drive Components and Cross Section of Upgrade CM

- Stepper Motor
  - 200 step/rev
  - 300 RPM
- Harmonic Drive
  - Gear Reduction = 8(
- Low voltage piezo
  - 150 V
  - 50 μm stroke
- Ball screw
  - Lead = 4 mm
  - Pitch = 25.75 mm
- Bellows/slides
  - axial thermal contraction

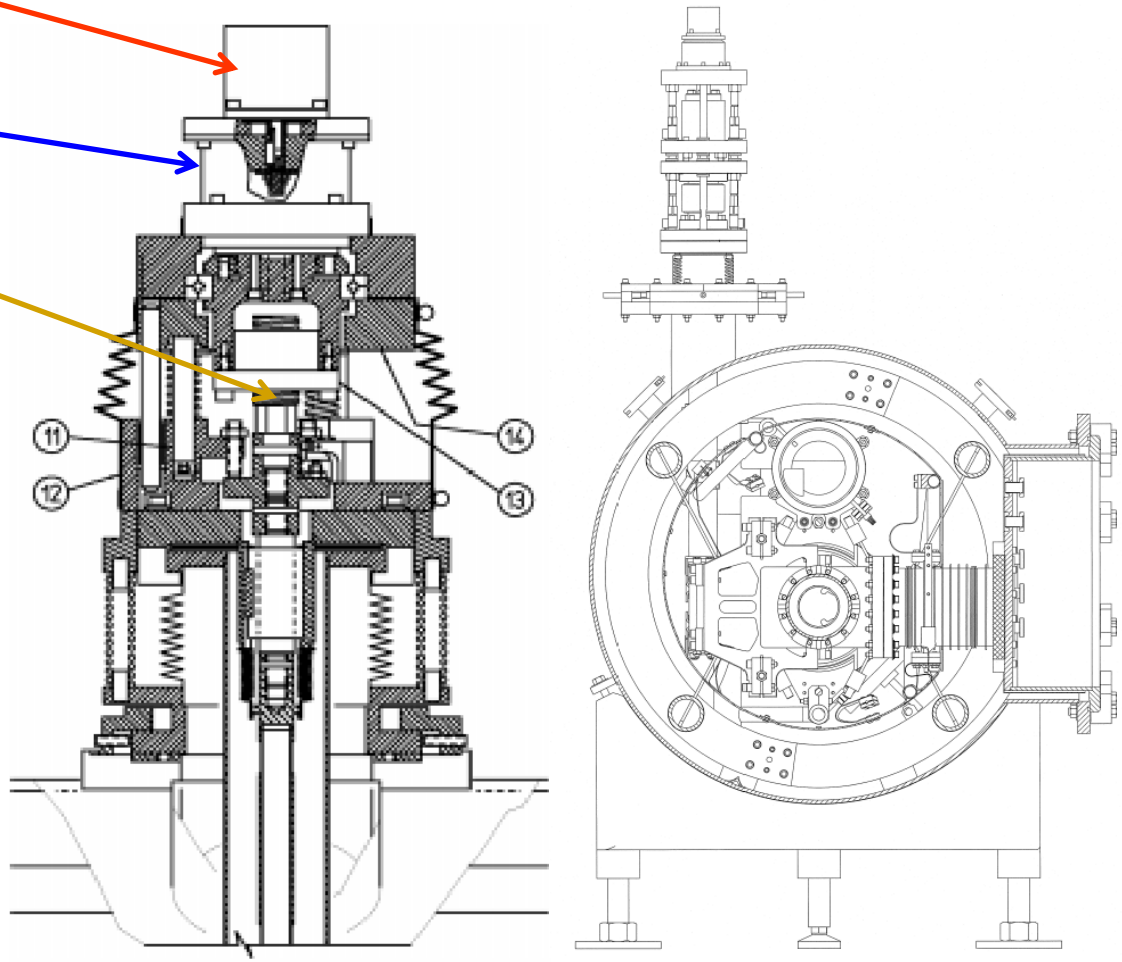

References: 19

CEBAF Upgrade Coarse Tuner Resolution/Deadband Test

Resolution/Deadband < 2 Hz

Drift due to Helium pressure fluctuations

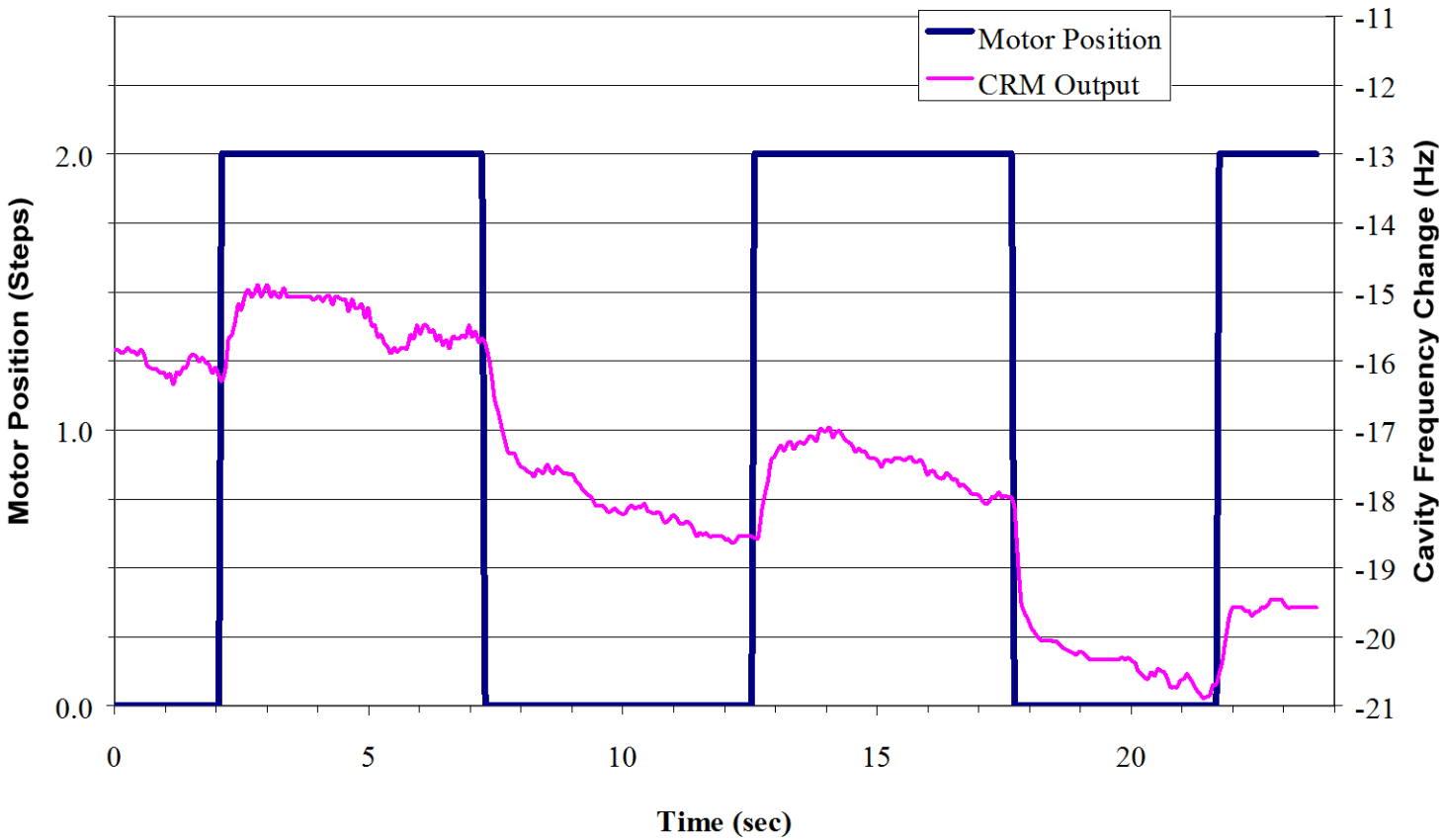

References: 3

Upgrade Tuner – SL21 / FEL03 :

Resolution (Piezo Hysteresis)

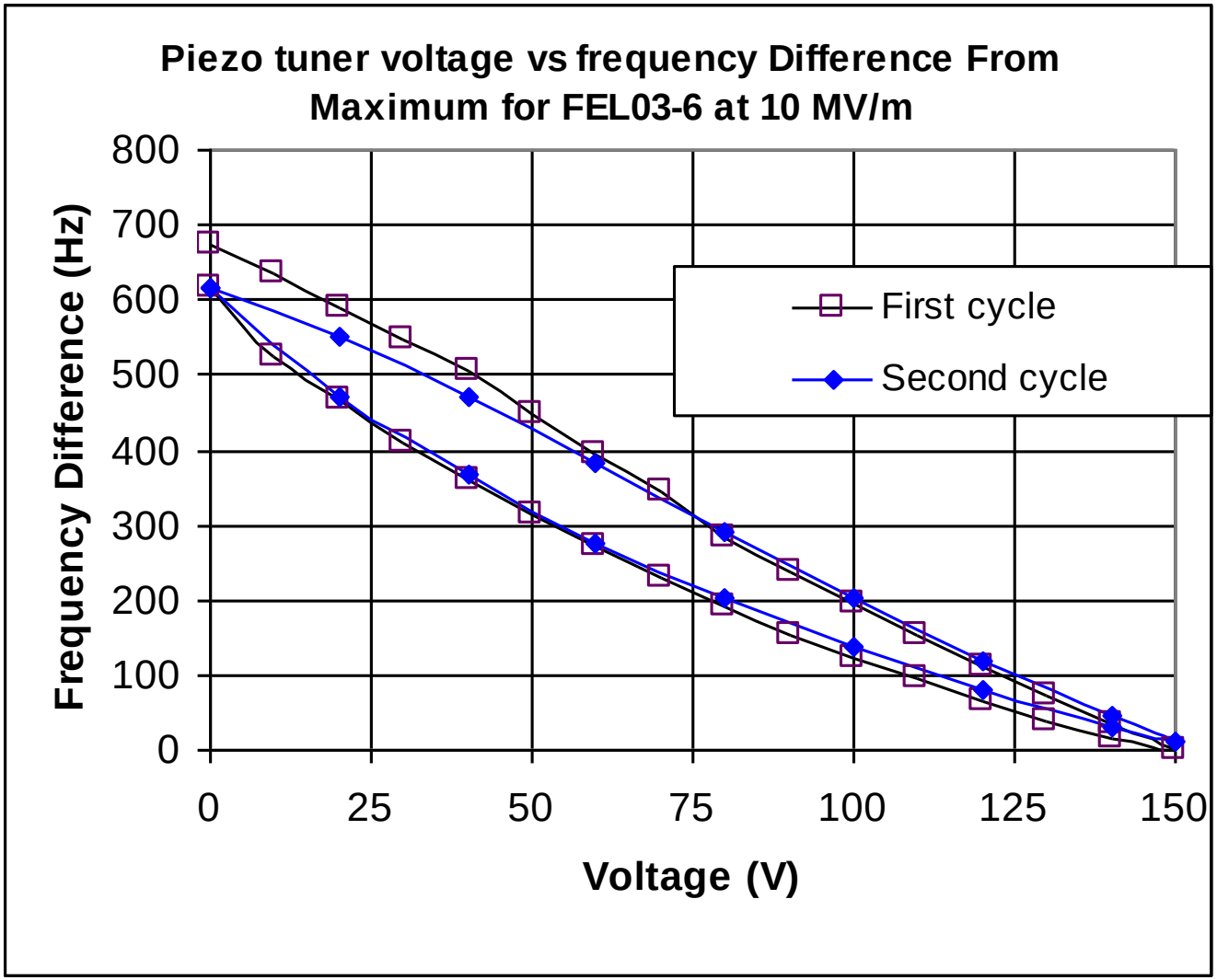

References: 3

RIA Tuner (MSU)

- **Mechanism**
  - Stainless steel rocker arm and drive rod
    - Attaches to chocks on cavity
    - Attaches via flexures and threaded studs to helium vessel head
  - Cavity tuned in compression or tension
- **Cold transmission – compressive/tensile force on drive rod**
- **Stepper motor and piezo external to vacuum tank**
- **Bellows on vacuum tank**
  - Need to accommodate relative thermal contraction of cavities
  - Allow tuner transmission to float (unlocked) during cooldown
  - Pre-load each tuner while warm, account for vacuum loading on bellows

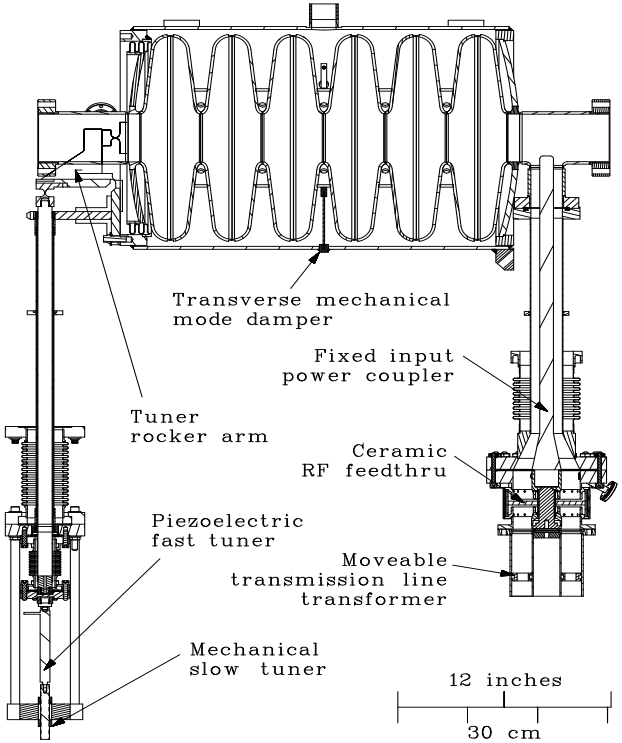

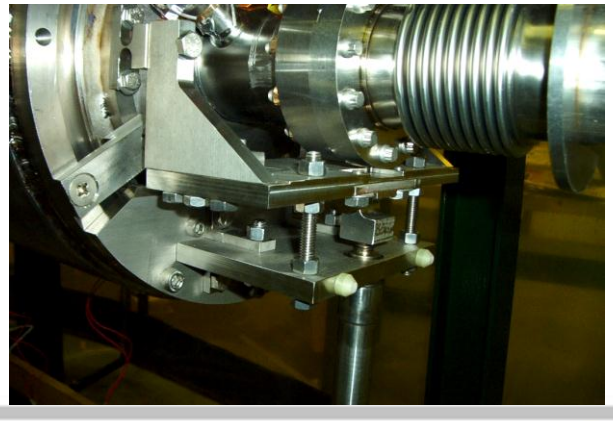

References: 19

RIA Tuner – Test Results:

Coarse and Fine Tuner Range; Active Feed-forward Control

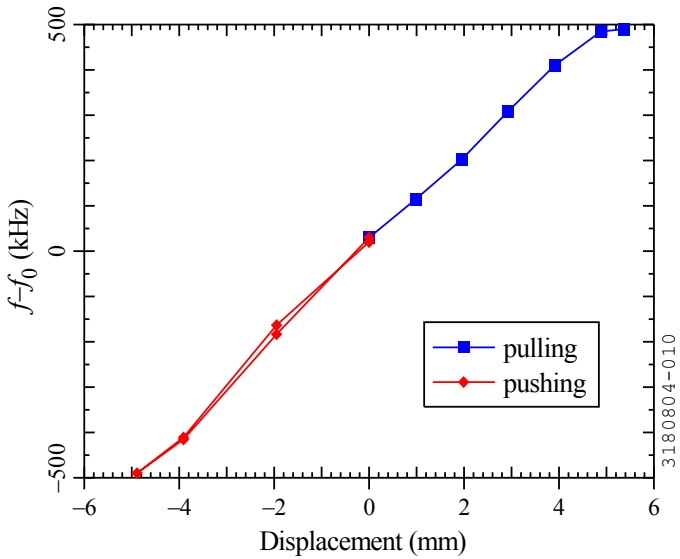

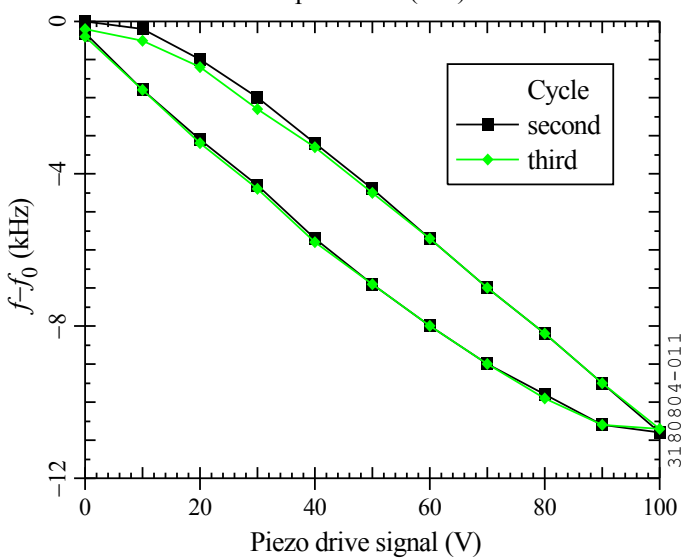

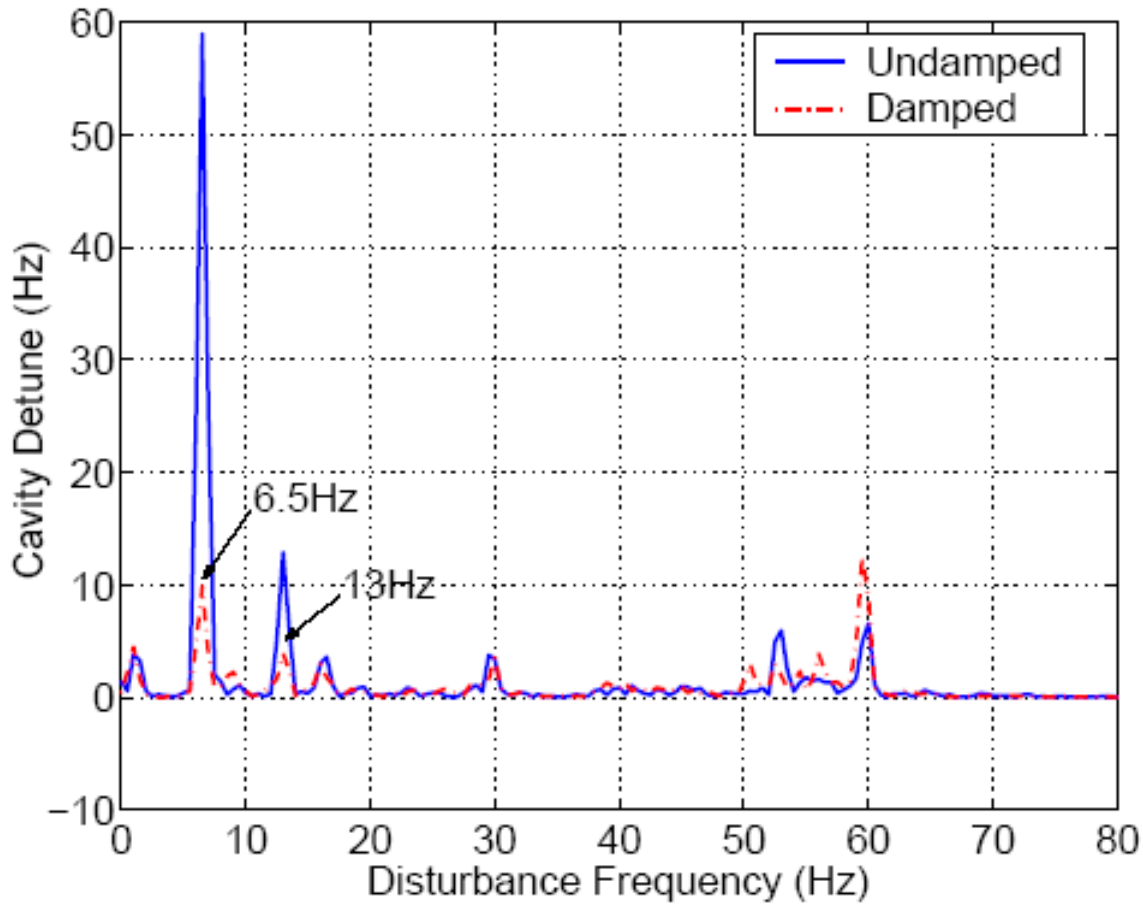

T. Kandil LINAC 2004

References: 19

Blade Tuners

- ± 1 mm fine tuning (on cavity) → ΔF on all piezo (sum) ≈ 3.5 kN
- 1 kHz fast tuning → ≈ 3 μm cavity displacement → ≈ 4 μm piezo displacement
- 4 μm piezo displacement → ≈ Δ F on all piezo ≈ 11.0 N
- ~1 Hz resolution (sufficient if <5Hz)

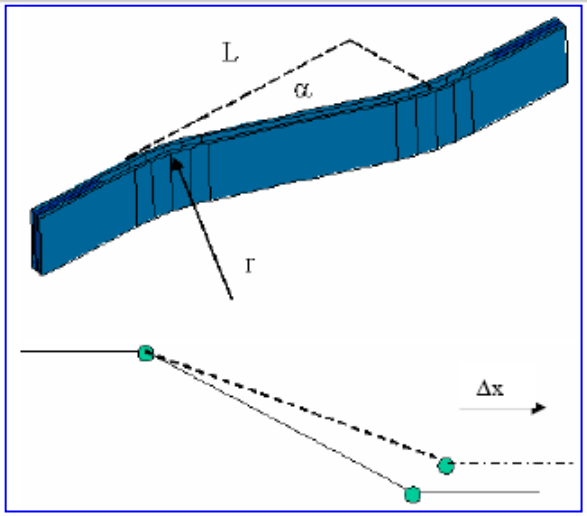

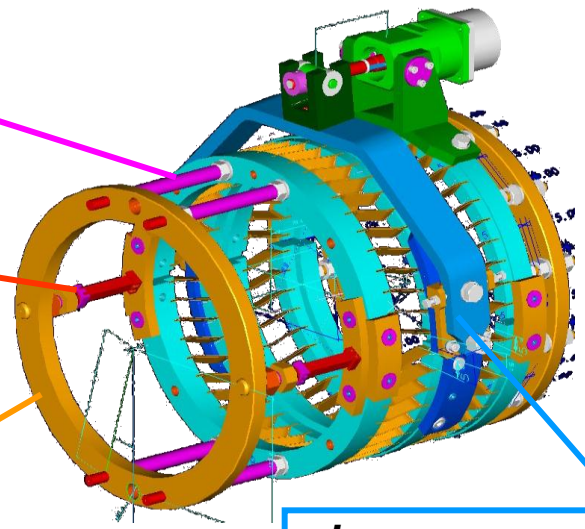

Stiffeners bars could be used in working cond. as safety devices.

Piezo

Ti or SS ring welded on the tank

Leverage arm

References: 19, 21

ILC-TTF Blade Tuners

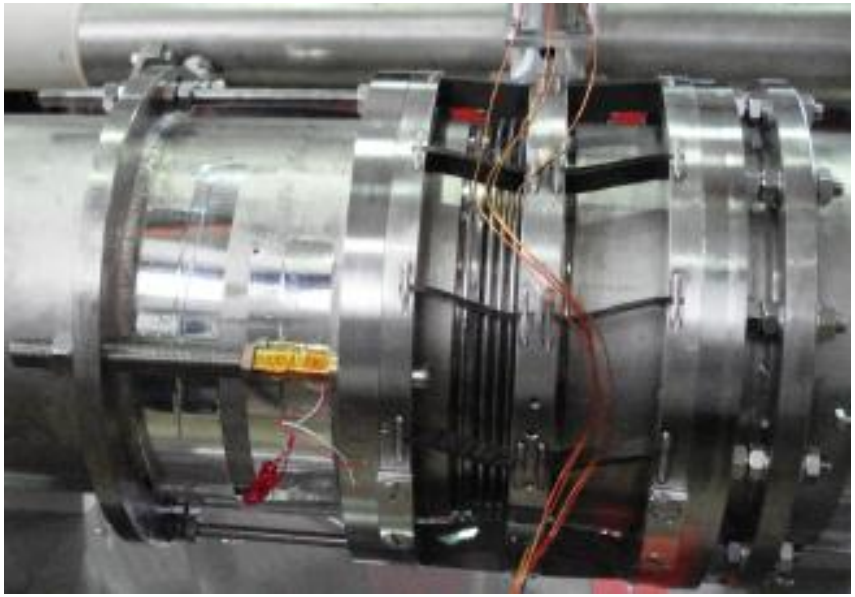

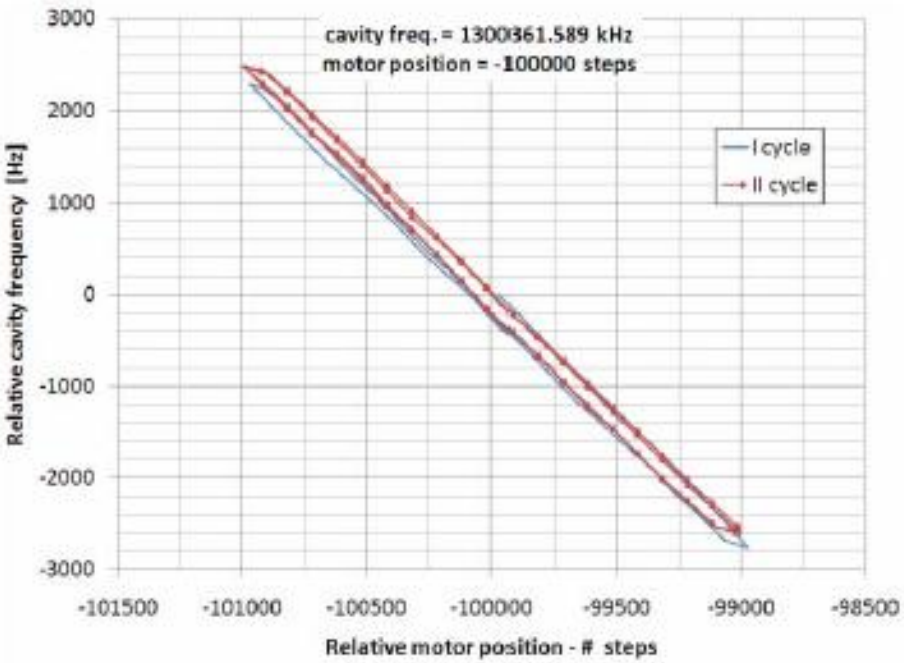

- **Mechanism – All cold, in vacuum components**
  - **Stainless Steel frame**
  - **Low voltage 40 mm Noliac Piezo**
  - **Attaches to helium vessel shell**
  - **Phytron stepper motor with planetary gear box**
  - **Cavity tuned in tension or compression – blades provide axial deflection**

References: 21

PZT Power Supply

Piezo tuner is basically a capacitive device.

Current is only needed during dynamic tuning

$$I = C\frac{dV}{dt} \square j\omega CV$$

Which ultimately determines the size of your power supply.

<u>Example: JLAB PZT</u>

Voltage Range : 0 to 150 volts (full stroke)

Capacitance: 21 uF (warm)

Tuning range: 0 to 2000 Hz (0 to 150 Vdc)

We have observed a mechanical perturbation at a frequency of 8 Hz

The perturbation effect on cavity detuning is 60 Hz (@ 1497 MHz)

PZT Power Supply

Goal is to damp the 8 Hz Perturbation

Since it has 60 Hz detuning the PZT voltage will need to be compensate over the range of

$$60/2000 \times V = 4.5 \text{ Volts}$$

Putting this into the previous equation (I=jωCV) gives us

$$I = 2 \times \pi \times 8Hz \times 21uF \times 4.5 = 4.75 \text{ mA}$$

Which is a relatively small power supply.

As a comparison a system with a 1000 volt PZT (same stroke), and a similar disturbance the current required is 31.7 mA

Some thought needs to go into PZT voltage for safety too!

PZT Power Supply

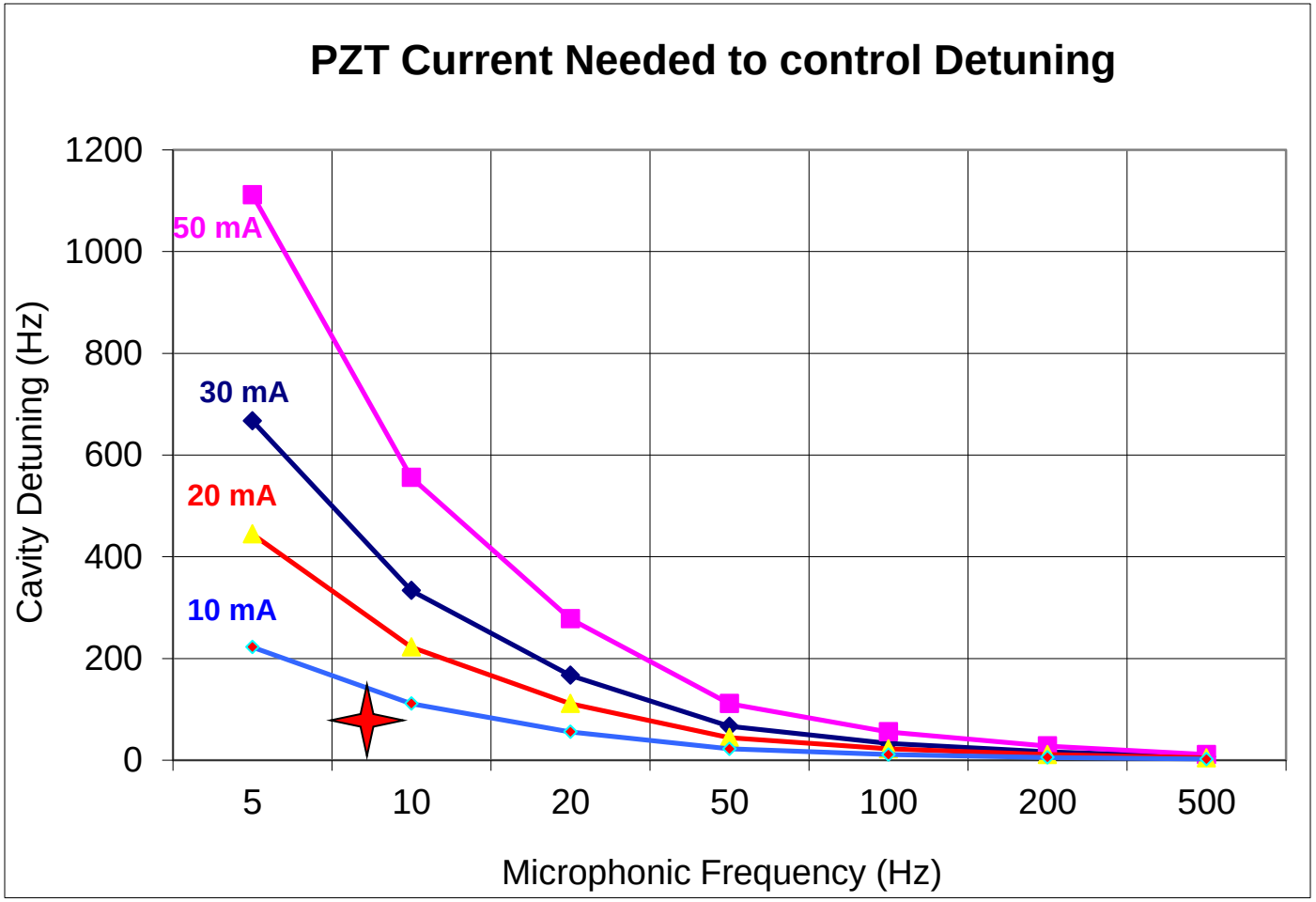

Assumes 150 Vdc PZT with 2000 Hz full stroke

JLAB Piezo Tuner

Features

- Commercial APEX piezo driver amplifier.
- 0 to 150 V at 50 mA.
- Bandwidth (FS): 10 Hz
- Packaging: 3U Eurocard x8

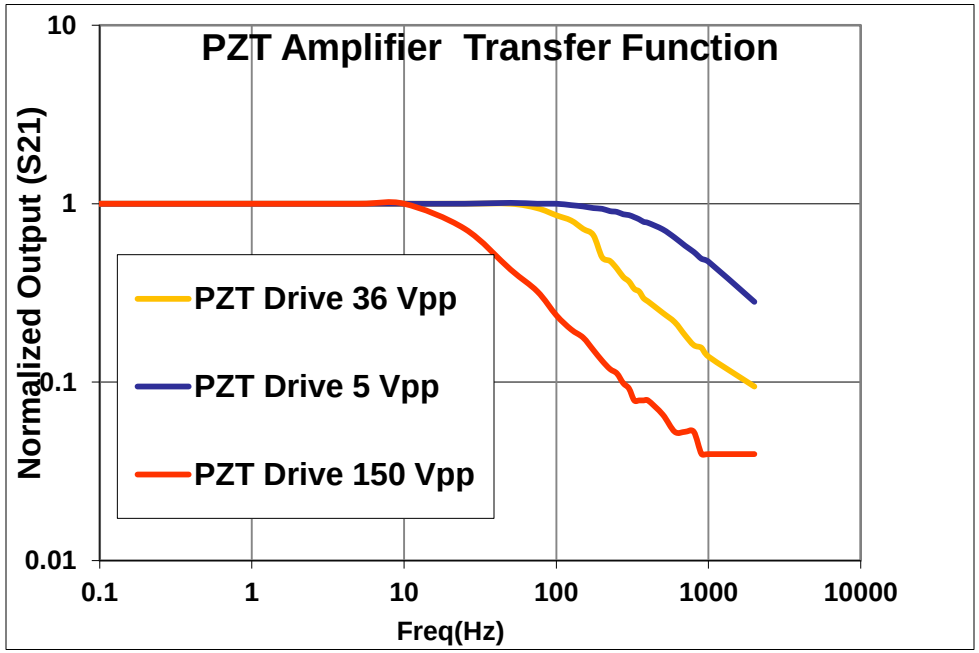

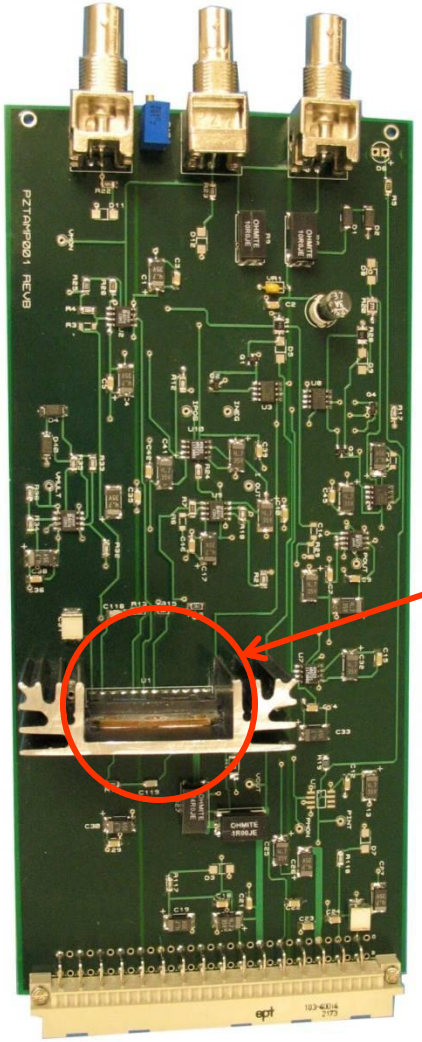

APEX Amplifier

Waveguide Stub Tuning

- Commonly used to adjust coupling
- Could also be used to compensate for detuning
- Issues:
  - Part of the waveguide becomes part of the resonant system
  - Speed for dynamic control of microphonics
  - Good for tuning Q_L higher …not so much lower

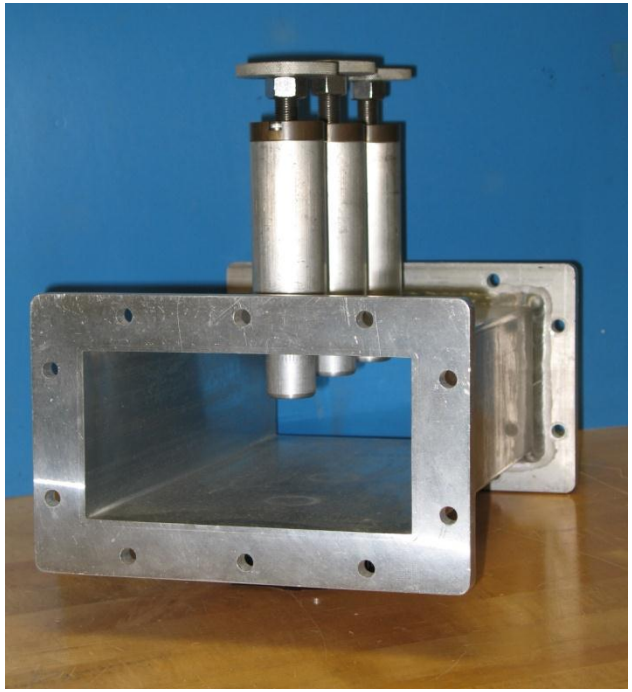

JLAB uses a three stub tuner to adjust cavity Q_{ext}

References: 19

High Power Modulators

- Solution for linacs powering multiple cavities from one power source, especially cw designs.

- **Need to compare cost and complexity between RF power source and power supply for ferrites**

Vector Modulator

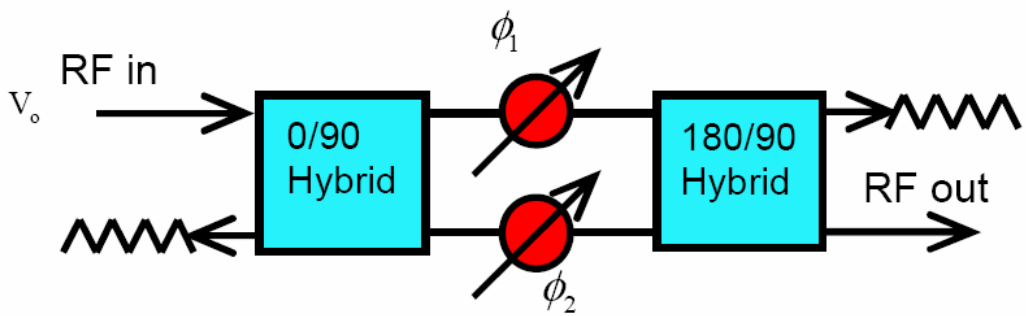

$$V_{out} = jV_{inc}\cos(\phi_1 - \phi_2)e^{j(\phi_1+\phi_2)}$$

Phase Shifter

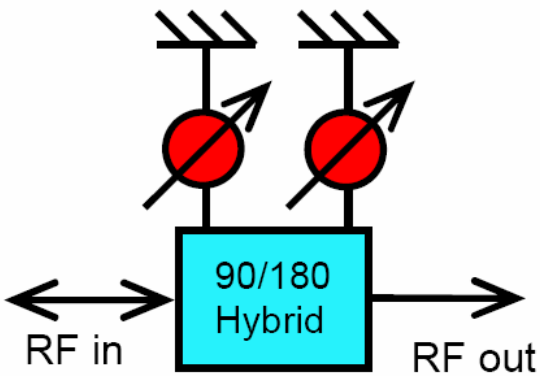

References: 19

Summary

Challenges - Thoughts

- **Design LLRF with respect to what is needed by the accelerator and the cryomodule.**

  Example: A proton/ion LLRF control system doesn't need light source precision!

- **Field control requirements beyond 0.05^{o} and .01% control**

  are pushing the limits of the receiver hardware.

  Trade offs between process gain (increased latency) and loop gain need to be made to reach beyond these values.

- **A lot of room to grow in fast mechanical control. Could have big pay off in reduced amplifier power**

Good Luck!

Acknowledgement - References

[1] L. Merminga, J. Delayen, "On the optimization of Qext under heavy beam loading and in the presence of microphonics", CEBAF-TN-96-022
[2] M. Liepe, et al, Proceedings of the 2005 Particle Accelerator Conference, Knoxville, USA
[3] K. Davis, T. Powers, "Microphonics Evaluation for the CEBAF Energy Upgrade", JLAB-TN-05-040
[4] D. Schulze, "Ponderomotive Stability of RF Resonators and Resonator Control Systems", KFK 1493, Karlsruhe (1971); ANL Translation ANL-TRANS-944 (1972).
[5] J. R. Delayen, "Phase and Amplitude Stabilization of Superconducting Resonators", Ph. D. Thesis, California Institute of Technology, 1978.
[6] T. Plawski, private conversations, plawski@jlab.org
[7] A.S. Hofler et al, Proceedings of the 2004 Linear Accelerator Conference, Lubeck, Germany
[8] A. Neumann, et al, Proceedings of the 2004 European Particle Accelerator Conference, Lucerne, Switzerland.
[9] C. Hovater, et al, Proceedings of the 2007 Particle Accelerator Conference, Albuquerque NM, USA
[10] L. Doolittle, Proceedings of the 2007 Asian Particle Accelerator Conference , Indore, India
[11] S. Simrock, et al, Proceedings of the 2006 Linear Accelerator Conference, Knoxville, TN USA
[12] J. Musson, private conversations, musson@jlab.org
[13] F. Ludwig et al, Proceedings of the 2006 European Particle Accelerator Conference, Edinburgh Scotland
[14] U. Mavric and B. Chase, Microwave Journal, Vol. 51, No. 3, March 2008, page 94
[15] L. Doolittle et al, Proceedings of the 2006 Linear Accelerator Conference, Knoxville, TN, USA
[16] M. Liepe, et al, Proceedings of the 2001 Particle Accelerator Conference, Chicago, IL, USA
[17] K. Davis, J Delayen, Proceedings of the 2003 Particle Accelerator Conference, Portland USA
[18] T. Schilcher, "Vector sum control of pulsed accelerated field in Lorentz force detuned superconducting cavities", PhD thesis, Hamburg 1998
[19] J. Delayen, "LLRF Control Systems Tuning Systems", 2007 SRF Workshop, Beijing China, October 2007
[20] M. Liepe, "Operationa Aspects of SC RF Cavities with Beam", 2007 SRF Workshop, Beijing China, October 2007
[21] A. Bosotti, et al, Full Characterization of Piezo Blade Tuner for Superconducting RF Cavities", Proceedings of EPAC08, Genoa Italy
[22] Walt Kester, "Converting Oscillator Phase Noise to Time Jitter", Analog Devices MT-008
[23] F.L. Walls et al" Tutorial: Fundamental Concepts and Definitions in PM and AM Noise Metrology; Discussion of Error Models for PM and AM Noise Measurements; State-of-the-Art Measurement Techniques for PM and AM Noise (3 parts) " ,http://tf.nist.gov/timefreq/general/pdf/1077.pdf, pg 71
[24] NIST, Physics Laboratory, Time and Frequency Division, http://tf.nist.gov/,
[25] L. Doolittle, "Plan for a 50 MHz Analog Output Channel", http://recycle.lbl.gov/~ldoolitt/plan50MHz/
[26] R. Reeder et al,"Analog-to-Digital Converter Clock Optimization: A Test Engineering Perspective", Analog Dialogue Volume 42 Number 1
[27] H. Padamsee, et al, "RF Superconductivity for Accelerators", John Wiley & Sons, 1998, pp. 47
[28] K. Dutton, et al, "The Art of Control Engineering", Addison Wesley, 1998
[29] T. Plawski et al, "RF System Modeling for the CEBAF Energy Upgrade" Proceedings of PAC09, Vancouver, May 2009
[30] C. Hovater, "RF CONTROL OF HIGH Q_L SUPERCONDUCTING CAVITIES" Proceedings of LINAC08, Victoria BC
[31] T. Allison et al, "A Digital Self Excited Loop for Accelerating Cavity Field Control", Proceedings of PAC07, Albuquerque, June 2007
[32] A. Vardanyan, et al, "An Analysis Tool for RF Control for Superconducting Cavities", ", Proceedings of EPAC02, Paris France
[33] Jack E. Volder, *The CORDIC Trigonometric Computing Technique, IRE Transactions on Electronic Computers*, September 1959
[34] R. Andraka, "A Survey of CORDIC Algorithms for FPGA Based Computers", FPGA '98. Proceedings of the 1998 ACM/SIGDA Feb. 1998, Monterey, CA.
[35] A. Neumann, "Compensating Microphonics in SRF Cavities to Ensure Beam Stability for Future Free Electron Lasers", PhD Thesis, Berlin 1998

CORDIC Functionally.....

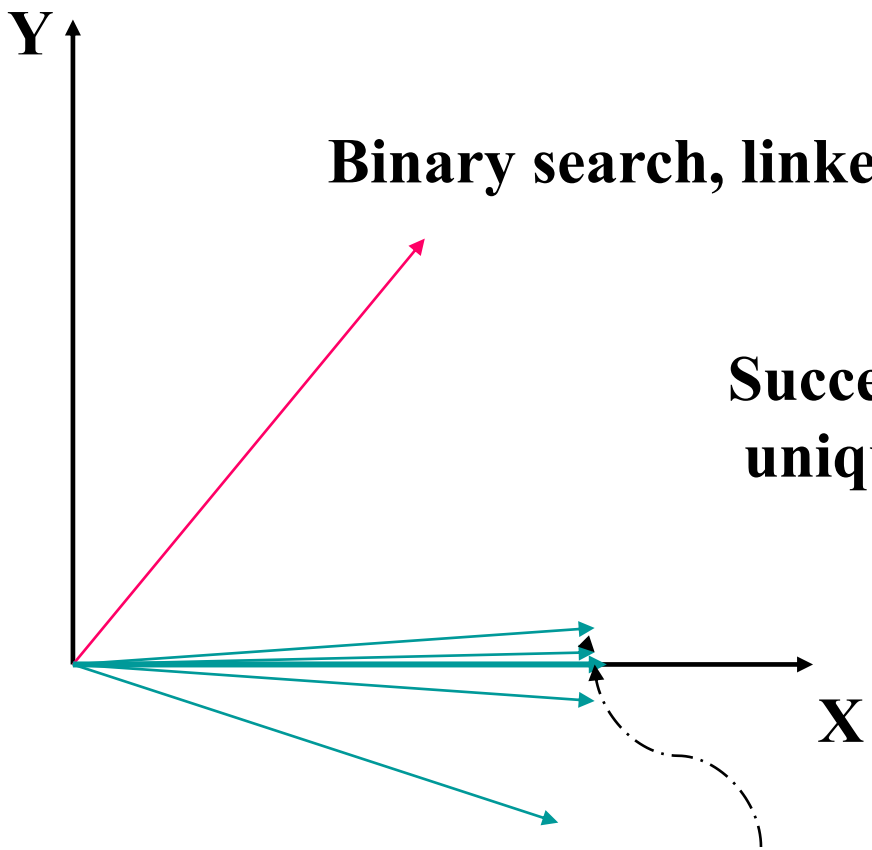

Binary search, linked to sgn(Y)

$$d_i = \begin{cases} +1, & if\ y_i < 0 \\ -1, & if\ y_i \geq 0 \end{cases}$$

Successively add angles to produce unique angle vector

$$\phi = \sum_i d_i \cdot \arctan(2^{-i})$$

$$z_{i+1} = z_i - d_i \cdot \arctan(2^{-i})$$

Resultant lies on X (real) axis with a residual gain of 1.6

Transmitter/Up Conversion

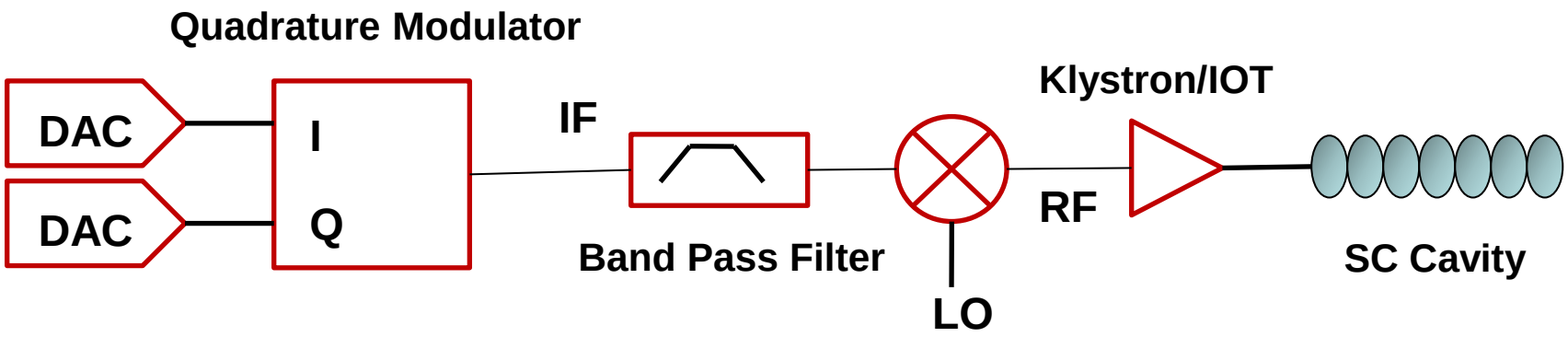

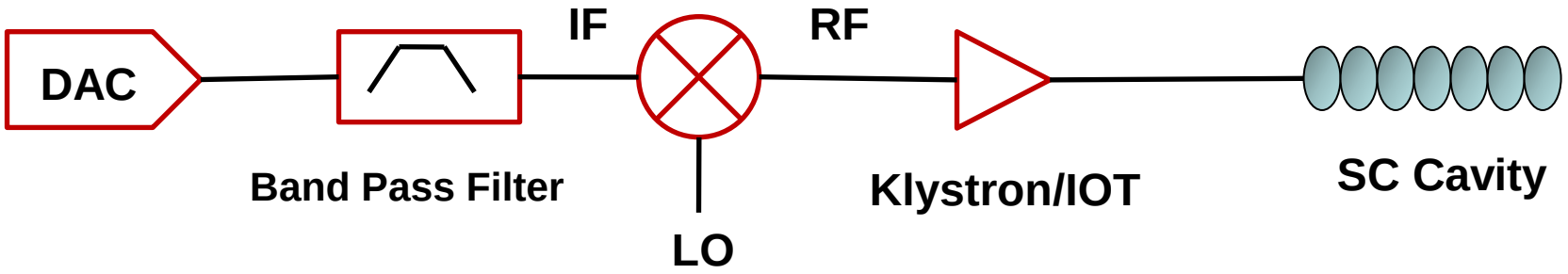

$2*LO \times 1*RF$ "image" Spur

- Mixing products are generated in the mixer and are "sourced" to all three ports
  - The 2LOx1RF spur is reflected off of the RF bandpass filter and then mixed down on top of the IF

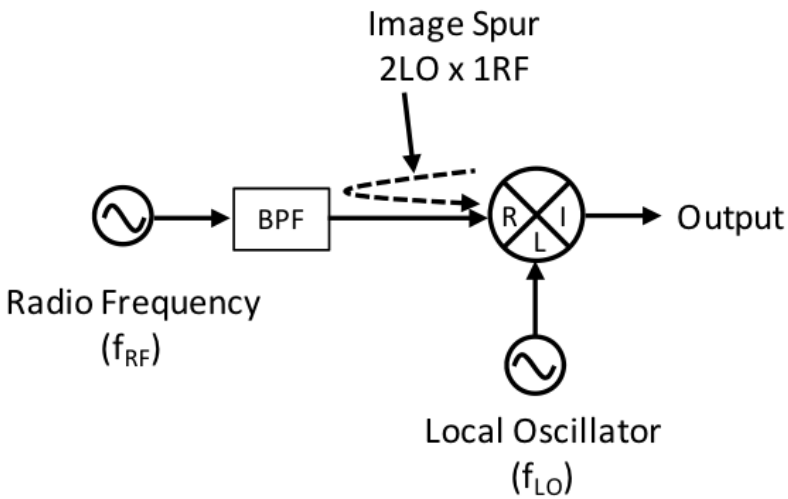

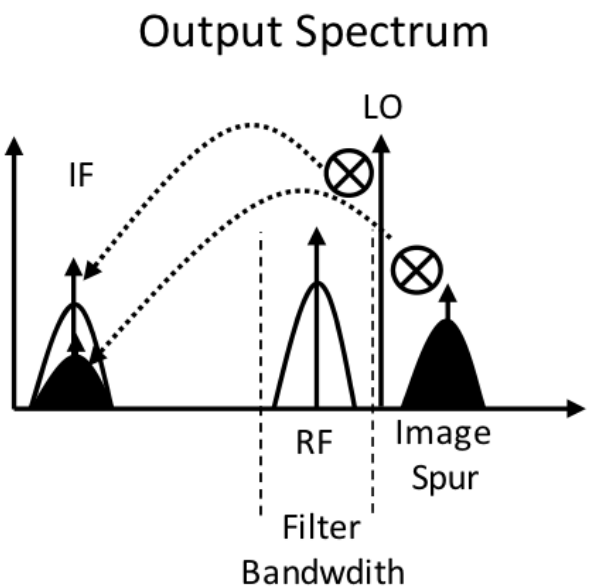

Drawing courtesy of Marki Microwave

B. Chase SRF 2011